Pennsylvania State Library
DOCUMENTS SECTION

Woodworking

AS AN AREA OF

INDUSTRIAL ARTS INSTRUCTION IN PENNSYLVANIA PUBLIC SCHOOLS

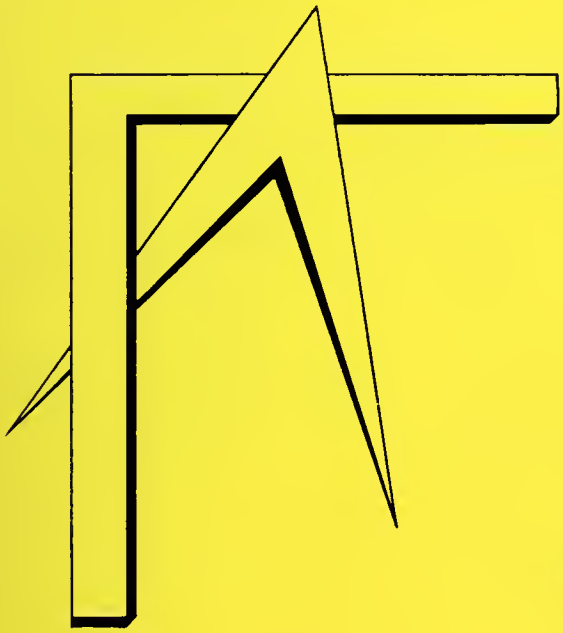

BULLETIN 331-L
1953

SUBJECT AREAS

Automotive	Home Mechanics	Plastics
Ceramics	Metal Forming	Sheet Metal
Electricity	Metal Machining	Textiles
Graphic Arts	Planning	Woodworking

COMMONWEALTH OF PENNSYLVANIA
DEPARTMENT OF PUBLIC INSTRUCTION • Harrisburg

Digitized by the Internet Archive
in 2016

https://archive.org/details/woodworkingasare00penn

Woodworking

AS AN AREA OF

INDUSTRIAL ARTS INSTRUCTION IN PENNSYLVANIA PUBLIC SCHOOLS

SUBJECT AREAS

Automotive	Home Mechanics	Plastics
Ceramics	Metal Forming	Sheet Metal
Electricity	Metal Machining	Textiles
Graphic Arts	Planning	Woodworking

BULLETIN 331-L
1953

COMMONWEALTH OF PENNSYLVANIA
DEPARTMENT OF PUBLIC INSTRUCTION • Harrisburg

Bulletin 331-L is available for other than Pennsylvania public school distribution on receipt of check or money order for $1.00 payable to the Commonwealth of Pennsylvania and sent to the Editor, Department of Public Instruction, Box 911, Education Building, Harrisburg, Pennsylvania.

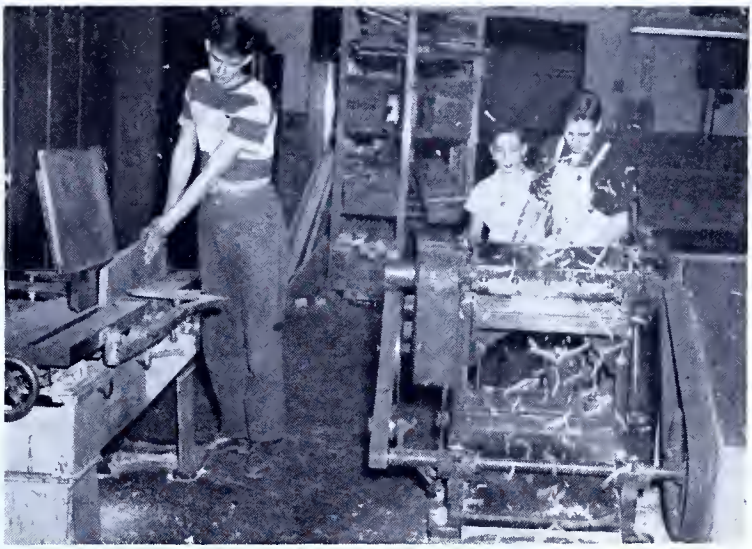

Foreword

WOODWORKING is one of a series of bulletins on specific areas of instruction in the broad field of Industrial Arts Education. It is a supplement to *Industrial Arts in Pennsylvania,* Bulletin 331, published in September, 1951, by the Department of Public Instruction. These supplementary bulletins give in detail information valuable in bringing various activities into the comprehensive general shops, or in expanding each activity for the establishment of general or unit shops.

Requests for information and assistance from public school people on the organization and administration of Industrial Arts programs indicates a need for this bulletin. It should prove interesting and useful to teacher, supervisor, and administrator.

This bulletin was prepared by Ralph D. Widdowson, State Area Coordinator of Trade and Industrial Education, under the supervision of Robert T. Stoner, Chief, Trade and Industrial Education, and under the general direction and guidance of Paul L. Cressman, Director of the Bureau of Instruction. Preliminary work on manuscript and layout planning were done by R. Randolph Karch, Adviser, Trade and Industrial Education.

The bulletin has been edited by Rachel S. Turner, Editor for the Department of Public Instruction.

Francis B. Haas

Superintendent of Public Instruction

December 1952

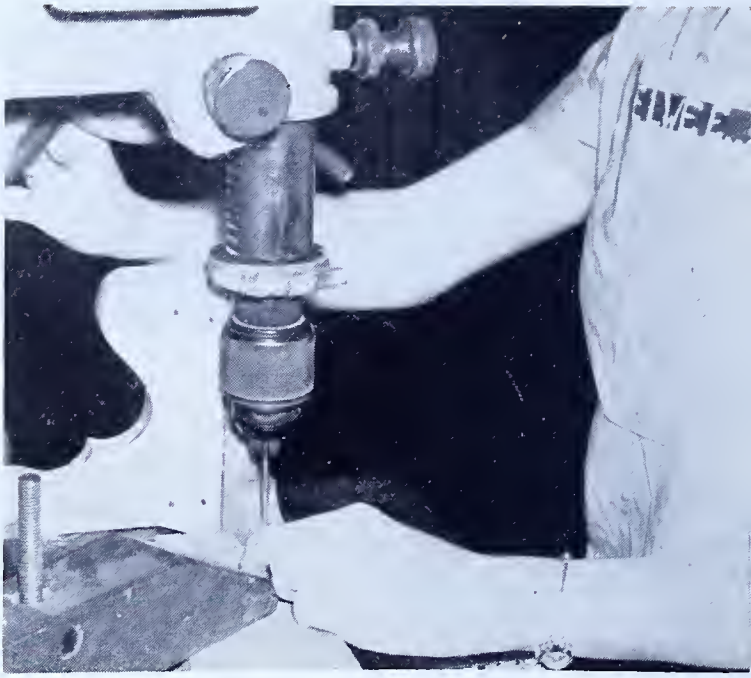

Department of Public Instruction

COMMONWEALTH OF PENNSYLVANIA

FRANCIS B. HAAS, *Superintendent of Public Instruction*
JOHN M. LUMLEY, *Deputy Superintendent*
DORR E. CROSLEY, *Deputy Superintendent*
CARL E. SEIFERT, *Deputy Superintendent*

•

BUREAU OF INSTRUCTION

PAUL L. CRESSMAN, *Director*

•

Elementary Education	W. G. Bartholomew, *Adviser*
Secondary Education	L. H. Snader, *Acting Chief*
	Ernest A. Stocker, *Adviser*
Junior Historian Service	Avis M. C. Cauley, *Adviser*
Agricultural Education	H. C. Fetterolf, *Chief*
	V. A. Martin, *Adviser*
Commercial Education	John R. Haubert, *Chief*
Curriculum Revision	Frederick L. Pond, *Consultant*
Aviation Education	Elizabeth Warnock, *Specialist*
Extension Education	A. W. Castle, *Chief*
Health and Physical Education	Elmer B. Cottrell, *Chief*
School Nursing	Mildred S. Coyle, *Adviser*
Highway Safety Education	Ivan J. Stehman, *Chief*
Farm and Home Safety Education	Samuel L. Horst, *Chief*
Home Economics Education	A. Pauline Sanders, *Chief*
	(Mrs.) Edith D. Davison, *Adviser*
School Lunch and Nutrition	Frances L. Hoag, *Chief*
	Jane Reese, *Adviser*
	Norma Lash, *Adviser*
Distribution of Free Food	E. J. Sullivan, *Chief*
Industrial Education	Robert T. Stoner, *Chief*
	R. Randolph Karch, *Adviser*
	Lyle E. Weissenfluh, *Adviser*
Training Facilities for Veterans	Roy G. Fornwalt, *Chief*
	Hugh Roberts, *Adviser*
	Horace H. Lowell, *Adviser*
Federal Surplus Property Disposal	Jay D. Boyer, *Chief*
	S. Harding Hartman, *Adviser*
Music Education	M. Claude Rosenberry, *Chief*
Art Education	George T. Miller, *Chief*
Occupational Information and Guidance	Harvey A. Heintzelman, *Chief*
Professional Library	Mary L. Abraham, *Librarian*

Public Service Institute ..... Alfred S. Holtz, *Principal*
Fire Training School ..... Edgar A. Spotz, *Adviser*
Police Training School ..... Harold W. Pierce, *Adviser*
Assessors Training School ..... Kerry McAmbley, *Adviser*
Borough Officers School ..... Frederick H. Miller, *Adviser*
William G. Jenkins, *Adviser*
Special Education ..... Lester N. Myer, *Chief*
Gladys B. Fish, *Adviser*
Private Trade School Registration ..... Rex E. Wright, *Chief*
Elmer D. Kline, *Adviser*
Armour A. Haines, *Adviser*
Aurora W. Pucillo, *Adviser*
Private Academic School Registration ..... Richard A. Rosenberry, *Chief*
Mazie H. Hancock, *Adviser*
Private Correspondence School Registration ..... Ulna F. Goodall, *Chief*
Private Business School Registration ..... Clyde E. Klinger, *Chief*

•

State Council of Education

Francis B. Haas, *President and Chief Executive Officer*

W. Floyd Clinger ..... Warren
Elsie M. Heckman ..... Allentown
Donald L. Helfferich ..... Lansdowne
John J. Sullivan ..... Philadelphia
Miles Horst ..... Palmyra
Robert C. Shaw ..... Camp Hill
G. Morris Smith ..... Selinsgrove
Herbert J. Stockton ..... Johnstown

Contents

Foreword iii

Introduction ix

1. The Organization of Woodworking as a School Subject 1

Aims and Objectives 1

Woodworking as an Integral Part of a Comprehensive General Industrial Arts Shop 2

Machines, Tools, Equipment, and Materials 2

Use of Materials 2

Woodworking as a General Unit Shop 3

2. Learning Units—Things to Do 5

For All Grades 5

For Senior High School 6

Use of Power Machines 6

3. Learning Units—Things to Know 9

4. **Organization of Instructional Material and Devices** 13
Project Selection 13
Use of Records, Forms, Charts, and Instructional Material 14
Information Sheets 15
Project-Assignment Sheets 15
Operation Sheet 15
Sample Information Sheet 16
Sample Project Assignment 17
Sample Pupil Project Plan 19
Teacher Project Analysis 19
Example of Teacher Project Anaylsis 20
Cumulative Project Record Card 21
Sample Pupil Cumulative Project Record Card 21
The Progress Chart 21
Sample Progress Chart 22
Starting a New Class 22
Shop Management Organization 23
Check List for Teachers on Care of the Shop 26

5. **Instructional Aids** 27
Books 27
Free Materials 31
Safety Literature 32
Books 32
Magazine Articles 33
Charts 33
Film Sources and Titles 33

6. **Equipment and Supplies** 35
How to Specify and Order Equipment and Supplies 35
How to Keep a Shop Inventory 36
Tools, Machinery, and Equipment List 37
Consumable Supplies 42
Storage and Control of Tools 45
Storage of Supplies and Projects 46
The Finishing Room 47

7. **Shop Layouts** 49

Introduction

Because of the differences in educational concepts in the backgrounds of administrator and teacher, in time pupils spend in the activity, in amount of funds available for equipment and supplies, as well as other local factors, no attempt is made in this bulletin to set up a common course of study applicable to all situations, or to tell the teacher what to teach, how to teach, or what equipment he should have in his shop.

This bulletin does list, in the "Doing" and "Knowing" sections on pages 5 through 11, course content which may be selected by the teacher. These learning units also help to determine particular aims and objectives, amount of time available to pupils in the woodworking area, and essential equipment.

Suggestions are made to guide the administrator in the organization of instruction, in the selection of instructional material, and in the use of tools and devices. Possible projects and records and forms are also suggested. Included for further guidance are samples of information sheets, operation sheets, and sample job assignments. An annotated bibliography of readily available instructional material and

visual aids, a suggested inventory of equipment and supplies and their approximate cost, feasible shop layouts and other related information to aid in the establishment or enrichment of the units of a comprehensive general shop, or a unit (one activity) shop, are presented.

Matters pertaining to Industrial Arts in general are not discussed in this bulletin. For further information the reader in referred to Bulletin 331, *Industrial Arts in Pennsylvania,* published by the Department of Public Instruction in September, 1951.

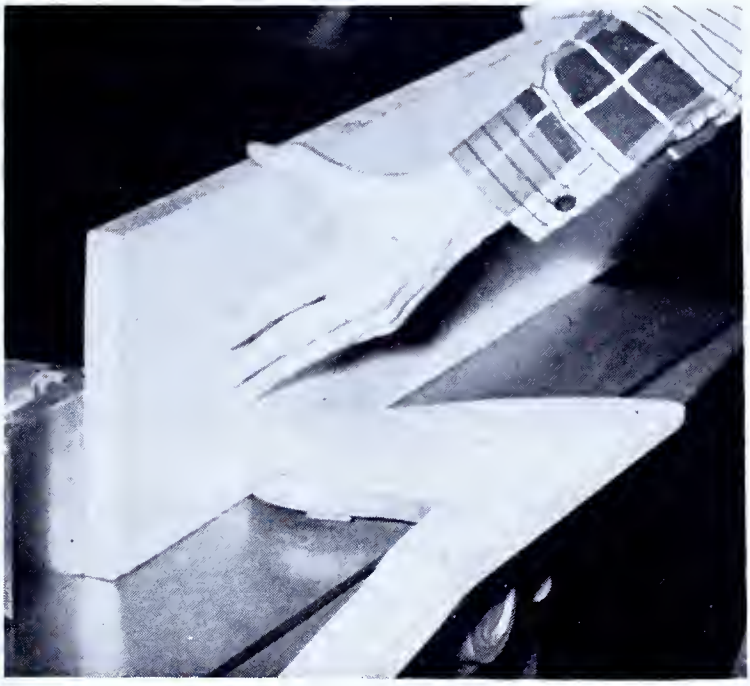

1. The Organization

OF WOODWORKING AS A SCHOOL SUBJECT

Aims and Objectives

The aims and objectives of Industrial Arts Education are outlined on pages 15 through 34 of Bulletin 331, *Industrial Arts in Pennsylvania,* published by the State Department of Public Instruction in 1951. In addition to these aims and objectives of a general nature, some of the specific aims and objectives of woodworking in the Industrial Arts program are:

1. To understand the contributions of woodworking to industry, business, and avocational interests
2. To provide a background of knowledge and fundamental skills leading to the selection of a vocational interest
3. To know the facts concerning the many occupations in the woodworking field
4. To recognize and appreciate good design

5. To obtain skills and knowledge in the improvement and maintenance of the home

Woodworking as an Integral Part of a Comprehensive General Industrial Arts Shop

This bulletin concerns woodworking as an integral part of at least four activities in a comprehensive general Industrial Arts shop. The suggested list of supplies, tools, and equipment is based on the minimum amounts generally accepted for the instruction of five pupils. In local situations where it is necessary to establish a larger unit, the amounts can be proportionately increased to meet the varying situations.

Machines, Tools, Equipment, and Materials

Intelligent planning of equipment and physical layout of the shop plays a major part in determining a good Industrial Arts program. In many instances school administrators or school board members need advice in planning and buying the machines, tools, and equipment for an effective Industrial Arts program. It is important therefore that those responsible for establishing the program should seek such advice from professionally trained Industrial Arts personnel. The Area Coordinator of Industrial Education responsible for the supervision of Industrial Arts may be consulted for technical advice.

Whether the machinery and equipment selected for the woodworking program will be used in junior, junior-senior, or senior high school instruction determines the size or type to be selected. The purchase of machinery and equipment that is either too small or too light is false economy, since the maintenance cost over a period of time will equal or exceed the original purchase price of heavier and more costly equipment. The specifications of woodworking power machinery should be matched against the maximum size of material to be processed in the instruction program. The overloading of machines creates a definite safety hazard. Shop planning and shop layout are covered extensively on pages 95 through 112 in Bulletin 331, *Industrial Arts in Pennsylvania,* published by the State Department of Public Instruction in 1951.

Use of Materials

A wide variety of materials should be used to meet the broad objectives of Industrial Arts, and to provide the pupil with the media for experiences needed to prepare him better for any vocation he may select.

Teachers of woodworking are inclined to limit project materials to one or two kinds of wood. Many kinds should be used so that pupils become acquainted with the great variety of wood used commercially. Instruction should also be given on materials other than wood, which are usually part of a completed project. These are such supplies as hardware, screws, nails, glue, kinds of finish.

In selecting projects some attention should be given to the use of a combination of materials and operations by combining the activities and materials of two or more areas in the construction of one project. For example, where electricity and woodworking are included as areas of a comprehensive general shop, a lamp project would combine the two activities.

Woodworking as a General Unit Shop

In school systems where the enrollment is large enough to justify an Industrial Arts program on a unit (one activity) basis, the suggested list of machines, tools, equipment, and consumable supplies can be increased proportionately to establish the unit type of woodworking shop. The size, type, and kind of machines and equipment should be determined by the planned course of study, *i. e.,* cabinet making, carpentry, patternmaking. The processing of lumber is an important factor to be considered in buying power machinery.

2. LEARNING UNITS

Things to Do

Woodworking is one of the most common activities taught in Industrial Arts, and more teachers are familiar with this subject than any subject in the field. Industrial Arts woodworking, as taught in some schools in the past, has been much too narrow in scope. Traditional subject matter, projects, and learning methods have been too prevalent. The following learning units and information sheets are listed here to help the Industrial Arts teacher plan his instructional material.

FOR ALL GRADES

1. Read a working drawing
2. Make a sketch
3. Make out bill of materials
4. Plan procedure for doing the job
5. Use a rule in measuring and dividing spaces
6. Lay out pattern on stock
7. Use dividers or compasses, laying out curves and dividing spaces

8. Gauge with marking gauge
9. Use try square for testing
10. Use try square for laying out square cuts
11. Adjust a jack plane or smooth plane
12. Plane a true surface
13. Plane an edge square with an adjoining surface
14. Plane end grain
15. Saw to line with crosscut or ripsaw
16. Saw to line with backsaw
17. Use coping saw for inside and outside curves
18. Round edges
19. Finish outside and inside curves
20. Drill holes in wood
21. Countersink holes
22. Bore holes with an auger bit
23. Fasten with screws
24. Trim or pare with a chisel
25. Use sandpaper for smoothing
26. Use wood rasp for shaping ends, edges, and curves
27. Do gouge work
28. Prepare glue
29. Glue up work
30. Lay out and cut a chamfer
31. Hold stock with hand screws and clamps
32. Apply paint
33. Apply wax
34. Apply stain
35. Drive and draw nails
36. Set nails and brads
37. Smooth a surface with a scraper
38. Use a Foerstner bit
39. Apply fillers
40. Apply shellac
41. Apply lacquer
42. Apply varnish
43. Clean and care for brushes
44. Make a butt joint
45. Make a half-lap joint
46. Lay out and cut a dado joint
47. Cut a groove or rabbet
48. Lay out and cut a cross lap joint
49. Transfer a design
50. Sharpen edge tools
51. Adjust a block plane
52. Lay out duplicate parts
53. Lay out irregular design by means of squares

FOR SENIOR HIGH SCHOOL

1. Lay out and test cuts with the sliding T bevel
2. Lay out an octagon
3. Lay out a hexagon
4. Make an edge-to-edge glue joint
5. Dress a screwdriver
6. Set and use an expansion bit
7. Cut curves with a turning saw
8. Put on locks
9. Put on drawer pulls
10. Fit hinges
11. Put on ball catches
12. Apply finish with a spray gun
13. Apply inlay
14. Lay out and cut a miter joint
15. Make a dowel joint
16. Lay out and cut a blind mortise and tenon joint
17. Lay out and cut a through mortise and tenon joint
18. Make a drawer slide
19. Make and fit a drawer
20. Fasten a table top
21. Sharpen a scraper
22. Sharpen auger bits

Use of Power Machines

The learning units involving power tools are considered separately from hand-tool operation, since power machines are used at different grade levels according to the instructor's judgment of student abilities.

A word of caution should be given to the beginning Industrial Arts teacher concerning the time at which a student is permitted to use power machines. The following questions should be answered before the teacher makes his decision:

1. Has parental permission been obtained?
2. Have rules for safety operation been taught?
3. Have basic hand-tool operations been learned?
4. Is maturity and emotional temperament of the student satisfactory?
5. Does school policy allow this use?

All students should be required to learn the basic fundamental hand-tool processes before being permitted to operate machines; otherwise, the teacher will find it very difficult to teach these all-important basic skills. A well-planned demonstration of basic operations on each machine should be given before the student is permitted to operate that machine. Each student should be required to check his machine setup with the instructor before starting any new operation.

The machine-learning units listed below are based on individual machines. The numbers following the units are suggested grade levels in which pupils are permitted to perform each operation:

Units	*Grade Level*
The Jointer	
1. Rules for safe operation	10-11-12
2. Range of work which may be done	10-11-12
3. Care for and adjust machine	10-11-12
4. Join an edge	10-11-12
5. Cut a chamfer or bevel	10-11-12
6. Surface narrow stock	11-12
7. Take the wind out of a board	11-12
8. Cut a rabbet	12
The Surfacer	
1. Rules for safe operation	10-11-12
2. Range of work which may be done	10-11-12
3. Care for and adjust surfacer	10-11-12
4. Adjust for depth of cut	10-11-12
5. Adjust and control feed	10-11-12
6. Feed work into machine	10-11-12

Units	*Grade Level*
The Sander	
1. Rules for safe operation	9-10-11-12
2. Range of work which may be done	9-10-11-12
3. Care for and adjust sander	11-12
4. Operate sander on flat work	9-10-11-12
5. Operate the sander on curved work	10-11-12
The Jig Saw	
1. Rules for safe operation	8-9-10-11-12
2. Range of work which may be done	8-9-10-11-12
3. Care for and adjust saw	10-11-12
4. Set up for inside cuts	10-11-12
5. Saw inside curves	9-10-11-12
6. Saw outside curves	8-9-10-11-12

Units	Grade Level
The Circular Saw	
1. Rules for safe operation	10-11-12
2. Range of work which may be done	10-11-12
3. Care for and adjust saw	11-12
4. Rip	10-11-12
5. Cut off	10-11-12
6. Cut grooves	10-11-12
7. Cut dadoes	10-11-12
8. Cut tenons	10-11-12
9. Cut miters	10-11-12
10. Cut tapers	12
11. Resaw	12
The Band Saw	
1. Rules for safe operation	8-9-10-11-12
2. Range of work which may be done	10-11-12
3. Care for and adjust saw	11-12
4. Saw curves (large radius)	8-9-10-11-12
5. Saw curves (small radius)	11-12
6. Rip	8-9-10-11-12
7. Cut off	8-9-10-11-12
8. Cut tenons	10-11-12
The Wood Lathe	
1. Rules for safe operation	8-9-10-11-12
2. Range of work which may be done	9-10-11-12
3. Adjust and care for the lathe	9-10-11-12
4. Center stock	8-9-10-11-12
5. Mount work between centers	8-9-10-11-12
6. Rough down with a gouge	8-9-10-11-12
7. Smooth with a skew	10-11-12
8. Lay off pattern on piece	9-10-11-12
9. Size with a sizing tool	8-9-10-11-12
10. Mark off with a skew	9-10-11-12
11. Trim with a cut-off tool	9-10-11-12
12. Cut shoulders with a skew	10-11-12
13. Cut tapers with a skew	10-11-12
14. Cut beads or convex surfaces with a skew	10-11-12
15. Scrape with a skew	8-9-10-11-12
16. Measure with inside calipers	10-11-12
17. Measure with outside calipers	10-11-12
18. Cut concave curves with a gouge	9-10-11-12
19. Make use of templates	9-10-11-12
20. Mount work on face plates	10-11-12
21. Mount work on screw chuck	10-11-12
22. Size work on face plate	10-11-12
23. Hollow out work on a face plate or screw chuck	10-11-12
24. Fasten pieces together temporarily for turning	11-12
25. Cut off stock in the lathe	10-11-12
26. Sand stock in the lathe	8-9-10-11-12
27. Apply finish in the lathe	8-9-10-11-12
28. Make a hollow chuck and mount work on it	11-12
29. Make a spindle chuck and mount work on it	11-12
30. Make a setup for duplicating parts	11-12

3. LEARNING UNITS

Things to Know

In organizing and establishing a comprehensive woodworking program to meet the nonmanipulative values and outcomes of Industrial Arts, a teacher must allow time for instruction relative to the technical, consumer knowledge and the guidance values inherent in any good program.

A list of suggested topics is given here to help the teacher formulate an effective instructional program:

Lumber

1. Identification of the following kinds of lumber and any other kinds in common use in the community: pine, spruce, cypress, oak, walnut, birch, maple, mahogany, red cedar, hickory, gum, chestnut, and poplar
2. Knowing the principal characteristics of each kind, its working properties, its chief uses, and important sources of supply

3. The methods of cutting and milling lumber
4. The effect of moisture on wood
5. The standard dimensions of lumber and how they are classified
6. The nominal and actual dimensions of lumber
7. Seasoning of lumber
8. How veneer and plywood are made and their uses

Tools

9. Kinds of tools and their uses
10. Protection of cutting edge
11. Grinding and whetting angle of plane irons and chisels
12. Size and number of bits
13. Characteristics of ripsaw, crosscut saw, and hacksaw

Fasteners

14. The kinds of nails
15. The uses of the different kinds of nails
16. The sizes of nails
17. How nails are sold
18. The size of brads and how sold
19. The sizes, kinds, and uses of corrugated fasteners
20. The kinds of screws
21. The uses of the different kinds of screws
22. How the sizes and kinds of screws are indicated
23. How screws are sold

Sandpaper and Steel Wool

24. The kinds of sandpaper
25. The grades of sandpaper
26. The principal uses of sandpaper
27. The grades and uses of steel wool
28. The object of finishes
29. The kinds of finishes in common use, such as stain, oil, wax, shellac, varnish, lacquer, enamel, and paint
30. The durability of different finishes
31. The conditions or places in which various kinds of finishes may be used to advantage
32. Materials from which finishes are made
33. Thinners used for different kinds of finishes
34. Length of time it takes different finishes to dry

Glue

35. The kinds of glue and their uses
36. The preparation of glue

Trades

37. Carpentry
38. Cabinetmaking
39. Patternmaking
40. Millwork
41. Wages and effect of unions on different trades
42. Hours and work seasons of different trades
43. Training required in different trades

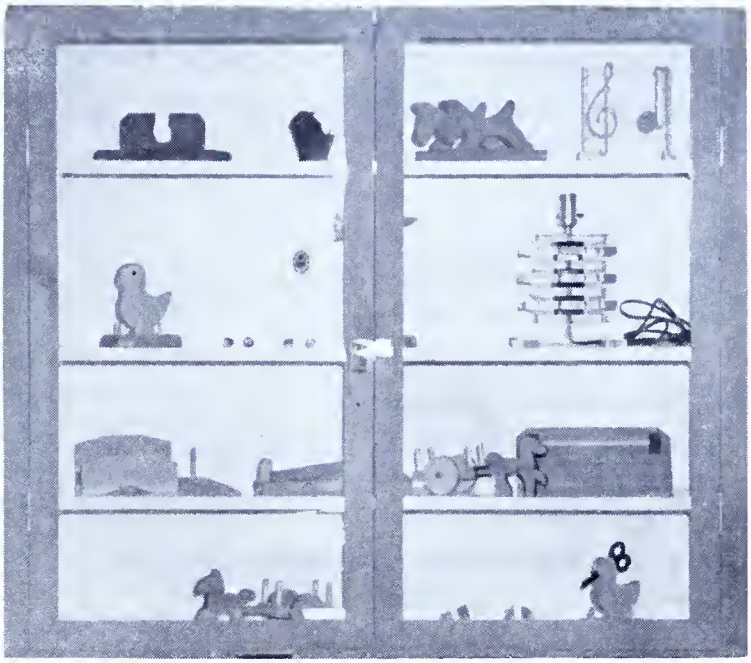

4. ORGANIZATION OF

Instructional Material and Devices

Project Selection

It is around shop projects that instruction is built, and it is through them that pupils are introduced to the different learning units. Projects for beginning pupils should have a few basic learning units selected by the instructor and required of all pupils as standard jobs in order to get the class under way without confusion or delay. Subsequent projects should include new learning units and should provide practice in the old. As pupils advance in knowledge and skills, they may be permitted to select from a group of projects previously selected by the instructor. Free choice should be encouraged after the pupil has mastered fundamental tool processes and acquired sufficient experience to make wise selections. Final approval of the selection should rest with the instructor. A display case of finished projects motivates the pupil's interest and aids him in selecting his project. A display case is illustrated above.

Regardless of who makes the selection, in order to conform to definite standards, projects should:

1. Contain some of the learning units desired
2. Be within range of the pupil's ability and yet difficult enough to challenge his resourcefulness
3. Be of such nature that they can be handled under school shop conditions
4. Embody good design and have some intrinsic value to the home or community
5. Be of such character that they can be completed within a reasonable, specified time
6. Have value in the pupil's estimation so as to nurture further interest

Use of Records, Forms, Charts, and Instructional Material

The Industrial Arts teacher of a comprehensive shop program is confronted with many problems that have to do with the administration of the program, details of instruction, and the handling of supplies. The problems increase as the activities in the shop become more diversified.

Industrial Arts teachers must, therefore, delegate certain responsibilities to student personnel, and use information sheets, job assignment sheets, operation sheets, project record cards, and progress charts.

When shop work was first introduced into the public schools, teachers had a feeling that it provided a means of escape from the "drudgery of books." Because of this, very little use was made of written materials. In recent years, however, because of enriched programs including more than one activity, as well as forward strides made in the writing and publishing of well-written materials, Industrial Arts teachers are using this material advantageously. Some of the advantages of using written material are:

1. It gives the teacher more time for selecting instructional material and arranging it in the best learning order
2. It makes more accurate instructions possible
3. It places more responsibility on the student through use of reference materials
4. It lends itself to accurate record-keeping and checking
5. Larger classes can be handled more effectively
6. It gives the teacher more time for individual help

Teachers should not allow instruction sheets to take the place of personal instruction and demonstrations. The main purpose of any instruction aid is to relieve the teacher in a shop having several activities in progress at the same time. Such aids should not replace the personal contact of teachers with the pupils.

The arrangement and filing of these instructional aids should be the responsibility of the pupils, so that teachers do not become too involved in keeping records.

Information Sheets (see page 16) present selected information on materials, manufacturing processes, sources, etc., which are closely related to the activity taught. Although such sheets are available on many subjects, it is sometimes necessary for teachers to prepare their own information sheets on subjects that cannot be obtained in printed form.

Project-Assignment Sheets (see page 17) are concerned primarily with assigning the student to a particular project. This sheet presents the project in its entirety, showing steps of procedure and listing of references that describe the operation or process. Where adequate reference material is not available, the term "demonstration" is inserted to indicate that the procedure is to be demonstrated. Check points can be noted on this sheet informing the pupil that he must check his progress with the teacher before going on with the project. With these sheets in use, the individual pupil can progress at his own speed and the teacher can feel certain that each student has had experiences in the most important of the manipulative activities. The use of the project-assignment sheet is helpful also in getting the entire class started with a minimum of confusion. As the class advances in knowledge and skills, the project-assignment sheet should be so modified that the pupil can eventually prepare his own project-assignment sheet after securing the teacher's approval on a project of his own choice. A skeleton form (mimeographed or printed) should be provided by the teacher to maintain uniformity.

The Operation Sheet presents the steps necessary in performing one operation or process made up of a number of skillful manipulations. "Plane a Surface True" and "Bore Holes With An Auger Bit" are examples of operations which may be listed on this sheet. A great variety of this material is available in book or manual form from industrial education publishing companies.

SAMPLE INFORMATION SHEET

ACTIVITY: *Woodworking*

Unit No. 1
Sheet No. 3

SUBJECT: *Seasoning of Lumber*

It is interesting to know that the first step in seasoning or drying lumber is to soak the logs in the mill pond. If thoroughly soaked from the time of cutting until *kiln-dried,* lumber will not *check* or *crack.* After lumber is sawed into boards it is usually air-dried for at least one year before it is kiln-dried. The lumber is placed in piles and then protected from the sun and rain. *Stickers* or narrow boards are placed crosswise between each layer to allow free circulation of air. The boards are kept from warping by their own weight. Drying must be slow to prevent *checking* and *warping* of the boards.

Air-dried lumber is not dry enough for cabinet work. After lumber is air-dried for at least a year, it is placed in a specially constructed oven called a *kiln.* In drying lumber scientifically the temperature of the kiln is thermostatically controlled and regulated. Air with a specified moisture content is circulated in the kiln which controls the rate of surface drying. In most parts of the country, lumber to be used for cabinetmaking should be dried so it has approximately a 10 to 15 per cent moisture content.

QUESTIONS

1. What are the two methods used for seasoning lumber?
2. Which method is used for drying cabinet wood?
3. What effect does improper drying have on lumber?
4. How long should lumber be air-dried before it is kiln-dried?
5. What is meant by "sticking" lumber?
6. What is meant by "moisture content"?

REFERENCES

1. *General Shop Woodworking,* Fryklund and La Berge
2. *Forest Products Laboratory,* Madison, Wisconsin
3. *Wood and Forest,* William Noyes

SAMPLE PROJECT ASSIGNMENT

To Make a Letter Holder

SPECIFICATIONS: To be made of white pine. The sides to be fastened with ½″, No. 6, R.H.B., wood screws. Finish with stain and shellac.

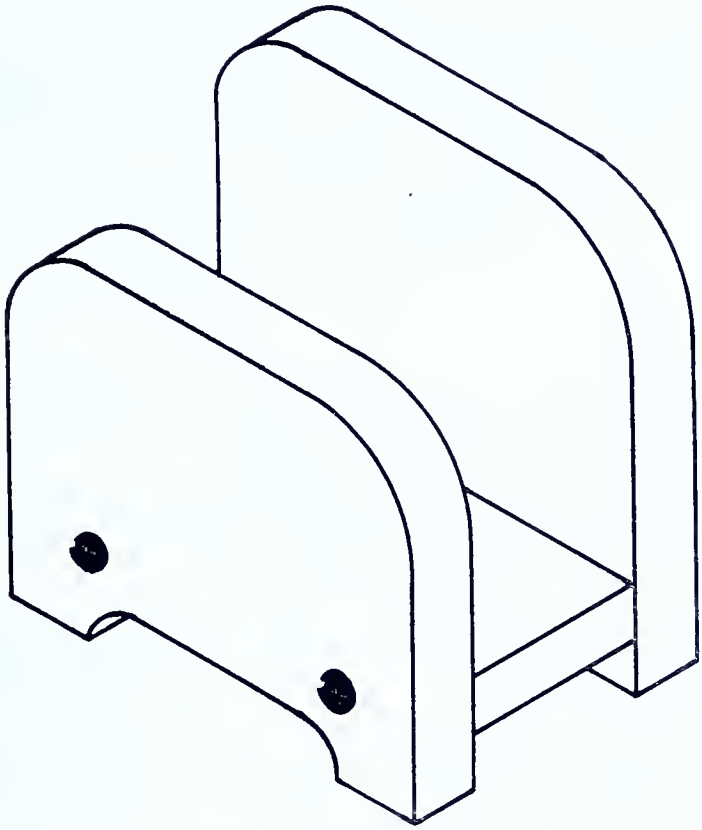

Things to be Learned

In making this letter holder an opportunity is presented to learn some new skills and to get additional practice in skills already learned.

The number of the instruction sheet or the number and page of the reference will be given after each item.

1. Read a working drawing. (1: pp. 87-88)
2. Make out a bill of material. (1: p. 90)
3. Plan the procedure for doing the project. (1: pp. 85-86)
4. Use a rule for measuring and dividing spaces. (1: pp. 11-12)
5. Check layout. (2: p. 97)
6. Use dividers or compass, laying out curves and dividing spaces. (1: p. 12)

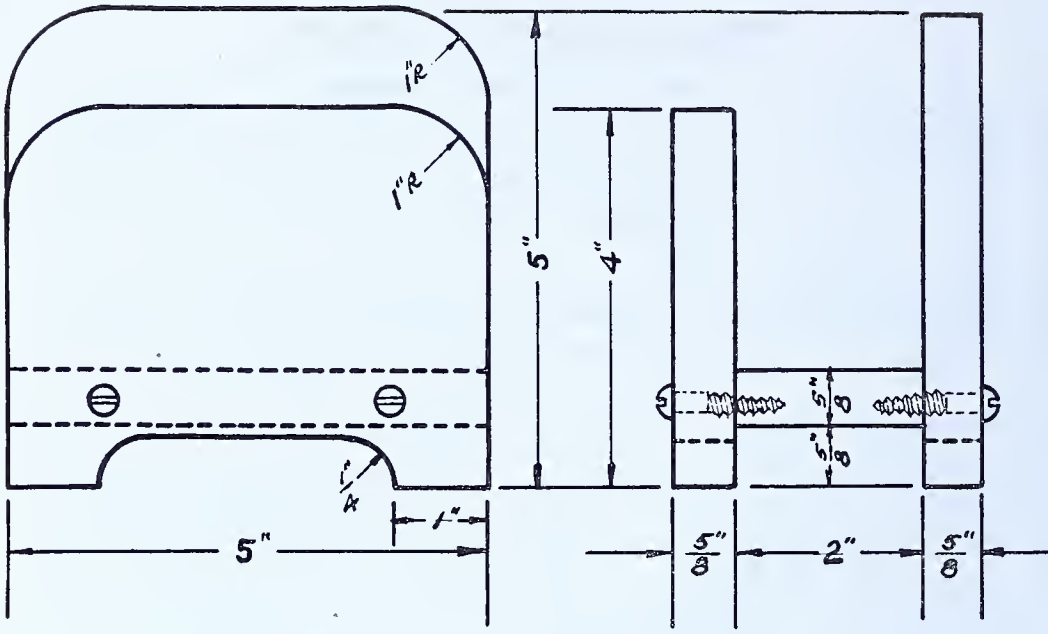

7. Gauge with marking gauge. (1: p. 12)
8. Use try square for testing. (1: pp. 16-17)
9. Plane a true surface. (1: pp. 15-16)
10. Plane an edge square with adjoining surface. (1: p. 16)
11. Plane end grain. (1: pp. 16-17)
12. Saw to line with crosscut or ripsaw. (1: p. 17)
13. Use coping saw for inside and outside curves. (1: pp. 41-42)
14. Finish outside curves. (1: pp. 47-48)
15. Drill holes in wood. (1: p. 32)
16. Fasten with screws. (1: pp. 35-36)
17. Use sandpaper. (1: pp. 47-48-49)
18. Apply stain. (1: p. 78)
19. Apply shellac. (1: p. 81)

References

1. *General Shop Woodworking,* Fryklund and La Berge
2. *Instructional Units in Hand Woodwork,* Brown and Tristison

The Sample Pupil Project Plan, shown below, is presented as an example of a form on which a pupil may plan his work, make a sketch, and list the steps of procedure he intends to follow in making the project.

SAMPLE PUPIL PROJECT PLAN

Student's Name_____ Grade_____ Section_____

Job _____

Directions: Each student will make a three-view sketch and a bill of material of the job or project to be made. List the principal steps in doing the job, showing what is to be done first, second, third, and so on.

Sketch

Steps of Procedure

1.
2.
3.
4.
5.
6. Etc.

Teacher Project Analysis

In selecting projects the teacher should carefully analyze each, making a list of learning units and a list of the most advantageous sequence of operations. The teacher's analysis should contain a page reference to such material aids as books or information sheets, and indicate the points at which the work should be checked.

A suggested teacher plan for analyzing projects is shown on page 20.

When the above analyses have been made, a project assignment can be made for each project. See page 17. Ordinarily this would include the following items:

1. A copy of drawing and specifications. (Mimeographed, printed, or blueprinted)
2. A list of learning units with page reference for each unit
3. A student's project-plan form on which the student is to record his plan before starting each project. (See above.)

EXAMPLE OF TEACHER PROJECT ANALYSIS

Suggested Projects to Be Taught in Grades 7-8-9

The analyses of projects shown below are given as examples only. Each instructor should select projects that fill the needs of his local situation in every grade taught.

NOTE: All numbers refer to the list of learning units or processes and information units, found on pages 5 to 11 of this bulletin. References to books and instructional aids may be coded to suit the teacher's filing system.

	Projects	*Project Book Reference*	*Things To Do*	*Things To Know*	*Information Reference Books*
7th Grade	Letter Holder	Code Your References in this Column	1-2-3-4-5-6-7-8-9-21-22-23-24-26-27-29-35-37	14-15-16-17-18	Code Your References in this Column
	Book Ends		2-3-4-5-6-20-21-22-23-24-25-27-28-30-31-32-36-41	I.U.-1, s-3 20-21-22-23	
	Kitchen Shelves		2-3-4-5-6-7-20-21-22-23-24-25-27-28-29-30-31-32-36-41	24-25-28	
	Necktie Rack		1-3-4-5-9-21-23-27-28-29-30-31-32-37-39-40-41	29-30-31	
8th Grade					
9th Grade					

Cumulative Project Record Card (see below) is simply a convenient and organized way of keeping a record of the pupil's progress in project experiences. It is also very helpful to the teacher in planning the instructional program for each student from semester to semester, or from year to year. It is valuable to those responsible for guidance and placement.

SAMPLE OF PUPIL CUMULATIVE PROJECT RECORD CARD

Name _____ Grade 7 8 9 10 11 12 PG

PUPIL CUMULATIVE PROJECT RECORD

Industrial Arts Department School _____ City _____

Shop	Project	Activity	Date Started	Date Finished	Total Periods	Teacher	Cost	Paid	Grade

The Progress Chart (see page 22) is useful in checking accomplishment of pupils where the instruction is individualized. Simple progress charts contain a list of names along one side of a sheet and a list of jobs, processes, or assignments along the adjacent side. The use of the progress chart aids the teacher in keeping an accurate record of the pupil's achievement, and if used properly, can be a factor in motivating the pupil's interest. Such a chart can be kept in the teacher's or student's notebook, or it could be laid out on a large piece of cardboard and hung on the wall. Regardless of the method used in keeping this chart, the teacher does the marking in order to keep the records correct.

PROGRESS CHART

Course _____

Grade _____ Semester _____ Year _____

Section _____

Days _____

Periods _____

Pupils' Names	Information Units					JOBS				

Starting a New Class

Good organization and planning are prerequisites to good teaching. Lesson plans provide the teacher with a guide to insure continuity of the presentation and the inclusion of all important points.

The following lesson plan is suggested as useful in starting a new class:

Lesson Plan

Preparation

1. Prepare forms for registering pupils and assigning to report stations
2. Have tools and equipment in good order
3. Have all tools and materials ready for first demonstration

Opening Procedure

Beginning of Class

1. Introduce yourself to class (write name on blackboard)
2. Have pupils submit information necessary for registration
3. Assign each pupil to a report station and locker
4. Explain organization of class, purpose of course, and shop procedure
5. Pass out project assignment sheets and explain briefly how they are used

6. Call group to demonstration bench and demonstrate first steps in the assignment
7. Issue material and begin work

Shop Management Organization

As the activities presented in Industrial Arts shops are increased in number and scope, it is expedient for the teacher to assign some of the clerical, preparatory, maintenance, and routine duties to pupils. The organization will vary according to the type of activity, size of class, age of pupils, and the physical layout of the shop.

Valuable training results from a good pupil personnel organization, as commonly recognized by experienced Industrial Arts teachers. A few of the many values are:

1. Leadership training
2. Development of a feeling of responsibility and cooperation
3. Motivation of pupil's interest in industrial operations and applications

In order to make any pupil personnel organization successful, its importance, need, and practicability must be explained carefully to the pupils. The success of the program depends entirely on the pupils' acceptance. The teacher should plan his presentation carefully in order to justify the value and need of such a program.

Because a teacher-imposed plan is readily recognized by the pupils, better cooperation can be developed through a personnel plan developed by the pupils with teacher guidance. A plan developed by a class or several classes motivates the pupils' interest in industrial personnel organizations, and a study of local plan systems by the pupils will be valuable in directing a well-organized plan for the school. The added cooperation attained by the teacher and the guidance value received by the pupils more than compensate for the extra time spent in the democratic development of this plan. A plan for setting up such a pupil personnel organization is given in Bulletin 331, *Industrial Arts in Pennsylvania,* page 83.

The following listing of pupil officers and duties is suggested and should be modified to fit local conditions and shop organization.

1. *Duties of the Shop Superintendent.* The most important position in the shop is that of the superintendent. Present his duties in such a manner that pupils will not only look forward to attaining that position, but will also respect the pupil who has attained it. It is the duty of the superintendent to:

a. Report to the shop as soon as possible after the bell rings
b. Obtain keys from the teacher and unlock class project storage cabinets. Unlock tool cabinets. Be sure foreman is there to check tools
c. Close shop door when tardy bell rings
d. Assist teachers in any way possible
e. See that foremen are taking care of assignments
f. See that pupils clean up promptly when bell rings
g. Lock cabinets after foremen have finished checking, and return keys to teacher

2. *Duties of the Tool Room Foreman.* Care of tools is the main responsibility of the tool room foreman, but during the working period, he should have time to work on his own project.

If open tool panels are used in the different activity areas, the tool room foreman would have the same duties as listed below, except that "b" would be eliminated and "c" would be changed to "check tool panels". His specific duties are to:

a. Inspect all tools and report any missing or broken tools to shop superintendent
b. Check out tools to pupils
c. Repair and sharpen tools
d. Check in tools and inspect them for cleanliness
e. Report to shop superintendent when all tools are checked in

3. *Duties of the Finishing Room Foreman.* The finishing room foreman's first responsibility is the finishing room, but he should have time to work on his individual assignment during the working period. His specific duties are to:

a. Check on finishing room to see that everything is in place. Report shortage of materials to teacher
b. Check out finishing materials to pupils
c. Assume responsibility for the glue table and bar and clamp rack
d. See that finishing room is clean and that brushes, oily rags, etc., are placed in their proper containers

4. *Duties of the Safety Engineer.* The main responsibility of the safety engineer is safety in the shop. The amount of time required for this duty will vary, but there will always be time to spend on individual assignments. The safety engineer's specific duties are to:

a. Assume responsibility for the safety of the pupils
b. Supervise the proper usage of tools, equipment, and supplies

c. Check on pupils to see that they follow safety rules
d. Check on loose clothing, ties, etc.
e. See that machine guards are in place, tools in trough, planes on side, etc.
f. See that goggles or face shields are used when necessary
g. Permit only the operator of the machine in the safety zone
h. Administer first aid in minor cases and report all injuries to the teacher

5. *Duties of the Maintenance Foreman.* The duties of the maintenance foreman will allow him to spend some time on his own assignments. His specific duties are to:

a. See that all machines and benches are clean at the beginning and end of the period
b. Check lockers and cabinets so that everything is in order at end of period
c. Be responsible for brushing off the table saw, jointer, jig saw, and drill press at end of period, and see that solder bench and glue bench are clean
d. Check lathes at end of period to see that pupils have brushed off all chips, shavings, and turnings
e. Pick up large pieces of scrap and put them in scrap box
f. Report to superintendent when everything is in good order

6. *Duties Confined to Teachers.* The teacher should retain control of all personal contacts and relationships. The likelihood of friction between pupils can be lessened if the teacher retains certain administrative duties. A few of these duties are:

a. Supervising pupils' entrance to shop
b. Checking attendance
c. Granting permission to get stock
d. Granting permission to use machines
e. Controlling pupil conduct
f. Granting permission to leave shop
g. Dismissal of pupils

Rotating Assignments

Any plan devised for rotating pupils through the officer personnel organization must be simple and easily administered. The teacher should guard against allowing the more efficient pupils to hold offices longer than their allotted time, merely because it produces a smoother organization. Each pupil should have equal opportunity to serve as a pupil officer as a part of the over-all democratic procedure in

classroom instruction. Several devices have been used successfully in rotating pupil assignments. One mechanical device which is being used by several schools is illustrated on page 84 in Bulletin 331, *Industrial Arts in Pennsylvania,* published by the Department of Public Instruction in 1951.

Some teachers prefer to use a mimeographed form listing the jobs to be done and leaving a space for the insertion of names of pupils assigned to the different jobs. This second method has some advantage in that it is good psychology to have the pupil's name identified with the responsibility assigned to him. Some teachers feel that there is an advantage in having outgoing officers spend one day with the new officers to break them into their new duties. The time each pupil serves will vary according to the size of the class. However, each pupil in the class should serve at least once. Another method used in rotating assignments can be found in *Industrial Arts and Vocational Education* for March, 1948, page 119.

A partial check list which may serve to guide the teacher follows:

CHECK LIST FOR TEACHERS ON CARE OF THE SHOP

	Yes	*No*
1. A place for everything and everything in its place		
2. A well-kept lumber room or rack		
3. Tools clean and in order		
4. Benches and machines well arranged		
5. Benches and machines kept clean		
6. Blackboard clean and presentable		
7. Bulletin board material well arranged and changed frequently		
8. Finishing room kept clean and orderly		
9. Floor cleaned daily		
10. Teacher's desk in order		
11. Books, pamphlets, blueprints kept clean and well arranged		
12. A box for scraps		
13. A container for oily rags		
14. Lockers kept orderly		
15. Sinks kept clean		
16. Out-of-way places swept and dusted frequently		
17. Project storage in good order		

5. Instructional Aids

In a bulletin of this kind it is impossible to list all of the instructional materials, such as books, pamphlets, study guides, and charts. Many instructors may find helpful other excellent professional aids which have not been reviewed here.

Some standard instructional materials are suggested, however, with author, publisher, address of publisher, and an annotation of the contents, so that the Industrial Arts teacher will know what phase of instruction is included in each reference.

BOOKS

Bast, Herbert, *Making Upholstered Furniture.* Milwaukee, Wisconsin, Bruce Publishing Company, 1946, 312 pp., $3.25

Two hundred photographs, plus illustrations, diagrams, and explanations which formulate a complete guide to all the fundamental processes of upholstery

Baysinger, G. B., and Shaal, H. H., *Woodwork Projects for Industrial Arts Students.* New York City, New York, McGraw-Hill Book Company, 1945, 157 pp., $1.40

Twenty-five carefully planned projects suitable for the junior high school grades

Bedell, E. L., and Gardner, E. C., *Household Mechanics.* Scranton, Pennsylvania, International Textbook Company, 1945, 241 pp., $2.60

Care of plumbing fixtures, electrical appliances, and tools; elementary wood, metals, rope, twine, concrete, and plaster work; wood finishing, and other repair jobs around the house. Well-suited to the general shop

Champion, Paul V., *Creative Crate Craft.* Milwaukee, Wisconsin, Bruce Publishing Company, 1942, 110 pp., $2.00

How to make clever and useful pieces of furniture from discarded crates

Derwallis, Jerome F., *111 Projects for the General Shop.* Peoria, Illinois, Charles A. Bennett Company, 1940, 111 pp., $2.25

Contains well-designed projects within the abilities of students from the seventh to tenth grades

De Vette, William A., *100 Problems in Woodwork.* Milwaukee, Wisconsin, Bruce Publishing Company, 1927, 208 pp., $3.25

A well-illustrated book with full-page working drawings. Projects range in difficulty from seventh to twelfth grades

Douglass, J. H., and Roberts, R. H., *Projects in Woodwork.* Bloomington, Illinois, McKnight and McKnight Publishing Company, 1948, 135 pp., revised edition, $3.50

Plans and designs for projects for use in Industrial Arts woodworking

Ensinger, E. W., *Problems in Artistic Wood Turning.* Milwaukee, Wisconsin, Bruce Publishing Company, 1926, 72 pp., $2.75

An illustrated variety of artistic wood-turning projects, with detailed drawings and photographs

Feirer, John L., *Industrial Arts Woodworking.* Peoria, Illinois, Charles A. Bennett Company, 1950, 288 pp., $2.88

Contains 44 illustrated projects for grades 7 to 12, along with instructional units in the various woodworking operations

Fryklund, V. C., and La Berge, A. J., *General Shop Woodworking.* Bloomington, Illinois, McKnight and McKnight Publishing Company, 1946, 160 pp., third edition, $1.00

A text for beginning students. Line drawings which explain techniques and illustrate each procedure. The material is organized in brief units and covers "what you should be able to do" and "what you should know"; tools and how to use them; and information on sources, processing, and uses of wood

Griffiths, Ira S., *Essentials of Woodworking.* Peoria, Illinois, Charles A. Bennett Company, 1931, 232 pp., $2.64

A basic book for hand tools—shaping, joining, and finishing woods for grades 7 through 9

Hjorth, Herman, *Basic Woodworking Processes.* Milwaukee, Wisconsin, Bruce Publishing Company, 1935, 250 pp., $2.75

A book that lists, describes, and illustrates the most important hand-tool operations and jobs in elementary woodworking

Hjorth, Herman, *Machine Woodworking.* Milwaukee, Wisconsin, Bruce Publishing Company, 1937, 371 pp., $3.25

An advanced book on woodworking machines and their uses. Helpful in the advanced Industrial Arts woodworking area and as a reference book

Jeffrey, Harry R., *Wood Finishing.* Peoria, Illinois, Charles A. Bennett Co., 1925, 177 pp., $2.50

A practical handbook for home or school shop use, on the covering and finishing of old or new furniture

Klenke, William W., *The Art of Wood Turning.* Peoria, Illinois, Charles A. Bennett Company, 1937, 122 pp., $2.25

The fundamental processes of wood turning, with directions for basic operations. Contains many projects for both junior and senior high school

Luckowitz, Joseph J., *Fifty Popular Woodworking Projects.* Milwaukee, Wisconsin, Bruce Publishing Company, 1938, 80 pp., $1.50

An illustrated collection of well-designed projects, most of which can be constructed in a very brief time from easy-to-obtain materials and with hand-tool processes

McGee, R. A., and Brown, A. G., *Instructional Units in Wood Finishing.* Milwaukee, Wisconsin, Bruce Publishing Company, 1929, 128 pp., $1.60

Contains instructional units in wood finishing dealing with the necessary materials and processes—how to apply stains, fillers, varnishes, and how to mix and match colors

Milton, A. S., and Wohlers, O. K., *A Course in Wood Turning.* Milwaukee, Wisconsin, Bruce Publishing Company, 1919, 200 pp., $3.75

An introduction to wood turning based on spindle and faceplate turning in which good design is emphasized. Instructions are clear and concise with good illustrations

Newkirk, L. V., and Johnson, W. H., *The Industrial Arts Program.* New York City, New York, The Macmillan Company, 1948, 357 pp., $5.50

What Industrial Arts projects should be taught at each grade level, how to organize Industrial Arts courses for local needs and facilities, what equipment is necessary, and which instructional techniques are effective

Raeth, G. A., *Master Homecraft Projects.* Milwaukee, Wisconsin, Bruce Publishing Company, 1942, 160 pp., $2.50

Furniture ideas from sample items for the beginner to more complex projects for the advanced student. Illustrations of end tables, pier cabinets, etc., and full directions for the construction of such items

Shaver, Richard, *Furniture Boys Like to Build.* Milwaukee, Wisconsin, Bruce Publishing Company, 1931, $3.00

Fifty attractive, illustrated articles on furniture selected from the colonial and other historical periods—for the senior high school

Shea, John G., *Woodworking for Everybody.* Scranton, Pennsylvania, International Textbook Company, 1944, 192 pp., $2.40

A basic text on woodworking providing the technical and general practices of woodworking in terms easy for pupils to understand

Showalter, Hazel, *Small Creations for Your Tools.* Milwaukee, Wisconsin, Bruce Publishing Company, 1943, 224 pp., $2.75

Seventy-eight patterns of novelties made from wood, spools, clothespins, and old chair rungs. For jackknife and coping saw only

Silvius, G. Harold, and Baysinger, Gerald B., *Safe Work Practice in Woodworking.* Chicago, Illinois, American Technical Society, 1945, 83 pp., $.60

A supplementary book for hand and machine tools, making them a part of shop instruction

Sowers, John I., *Visualized Projects in Woodworking.* New York City, New York, McGraw-Hill Book Company, 1945, 89 pp., $1.60

Thirty-four projects graded from junior through senior high school. Problems are presented pictorially with well-illustrated and detailed drawings, showing different steps in construction

Stanley Tools, *Early American Designs.* New Britain, Connecticut, $.25

Two packets, Series A and Series B, each containing 15 projects of early American design

Stanley Tools, *Stanley Woodworking Patterns.* New Britain, Connecticut, $.25

Detailed elementary woodworking plans for making simple projects

Tustison, F. E., and Brown, A. G., *Instructional Units in Hand Woodworking.* Milwaukee, Wisconsin, Bruce Publishing Company, 1930, 222 pp., $2.25

Elementary hand woodworking processes in unit form, for Industrial Arts courses

Waring, Ralph G., *Wood Finishing and Painting Made Easy.* Milwaukee, Wisconsin, Bruce Publishing Company, 1940, 230 pp., $2.75

Answers all questions with regard to the selecting and applying of finishes for wood and metal projects

Wilber, Gordon O., *Industrial Arts in General Education.* Scranton, Pennsylvania, International Textbook Company, 1948, 362 pp., $3.50

A well-written book on the methods of teaching Industrial Arts, describing and illustrating many teaching aids

Worst, Edward F., *Coping Saw Work.* Milwaukee, Wisconsin, Bruce Publishing Company, 1927, 132 pp., $2.00

Patterns in light woodwork of one-piece toys, dollhouses, toy vehicles, birdhouses, and kites—for junior high school

Wyatt, Edwin M., *Puzzles in Wood,* Milwaukee, Wisconsin, Bruce Publishing Company, 1928, 64 pp., $.60

Forty-five fascinating puzzles and toys for elementary woodworking in Industrial Arts

Wyatt, Edwin M., *Wonders in Wood.* Milwaukee, Wisconsin, Bruce Publishing Company, 1946, 76 pp., $.75

Puzzles in woodworking projects, from the simple to the more complex—for elementary work

FREE MATERIALS

American Forest Products Industries, Inc., 1319 Eighteenth Street, N. W., Washington, D. C. Booklets and charts on trees and woods

Appalachian Hardwood Manufacturers, Inc., 414 Walnut Street, Cincinnati 2, Ohio. Brochure No. 15, *Appalachian Hardwoods*

Behr-Manning Corp., Division of Norton Company, Troy, New York. *Sandpaper—Its How and Why*

DeVilbiss Company, Toledo, Ohio. Booklets on spray painting equipment and its uses

Douglas Fir Plywood Association, Tacoma 2, Washington. Booklets on plywood and its uses

E. C. Atkins and Company, 402 South Illinois Street, Indianapolis 9, Indiana. *Saw Sense; Directions for Fitting Narrow Band Saws;* and *Small Circular Saws*

General Finishes Sales and Service Company, 1548 West Bruce Street, Milwaukee, Wisconsin. The story of modern penetrating finishes —work sheets on refinishing

Mahogany Association, Inc., 75 East Wacker Drive, Chicago, Illinois. Booklet on *How to Identify Genuine Mahogany and Avoid Substitutes*

Masonite Corporation, 111 West Washington Street, Chicago 2, Illinois. Samples of Presswood and Tempered Presswood (Please specify thickness, 1/8 in., 3/16 in., 1/4 in., 5/16 in.)

National Paint, Varnish, and Lacquer Association, Inc., 1500 Rhode Island Avenue, Washington 5, D. C. *The Paint Story; Oil is the Tie That Binds; The Fascinating Story of Pigments;* and *Side Lights on Stains*

Pittsburgh Plate Glass Company, 632 Duquesne Way, Pittsburgh 22, Pennsylvania. *Pittsburgh Color Dynamics—The Scientific Utilization of Color to Promote Efficiency in Industry*

Savograu Company, 60 West Superior Street, Chicago 10, Illinois. Leaflets on paint and varnish remover and its uses

S. C. Johnson and Sons, Inc., Racine, Wisconsin. Booklets and leaflets on finishing waxes and their uses

Southern Cypress Manufacturers Association, Jacksonville, Florida. Booklets on cypress, its characteristics, and uses

United States Plywood Corp., 55 West 44th Street, New York 18, New York. Sample plywood

William Tinsser and Company, Inc., 319 Western Avenue, Chicago, Illinois. Booklets on production and uses of shellac

SAFETY LITERATURE

Books

American Standard Safety Code for Woodworking Machinery. American Standards Association, 29 West 39th Street, New York 18, New York, 1944. 22 pp.

Color Conditioning for Industry. E. I. DuPont de Nemours and Company, 67 34th Street, Brooklyn, New York

Color Dynamics. Pittsburgh Plate Glass Company, Pittsburgh, Pennsylvania, 1949. 35 pp.

Face Shields—For Face and Eye Protection—Safety Goggles. Hardware Mutual Casualty Company, 200 Strongs Avenue, Stevens Point, Wisconsin

First Aid Textbook. American Red Cross, Washington, D. C., 1946. 256 pp.

Safety Code for Industrial Arts Shops. Central High School, Industrial Arts Department, Trenton, New Jersey, 1948. 20 pp.

Safety Education in Industrial School Shops. Bulletin 332, Department of Public Instruction, Harrisburg, Pennsylvania, 1942

Safety in the Woodshop. Industrial Relations Department, Carnegie-Illinois Steel Corporation, Pittsburgh, Pennsylvania, 1949. 20 pp.

Safe Work Practice in Woodworking. American Technical Society, Drexel Avenue at 58th Street, Chicago, Illinois, 1945. 82 pp.

Shop Safety Illustrated. National Safety Council, Chicago, Illinois, 1940. 40 pp.

Your Guide to Safety in Woodworking Shops. Accident Prevention Department, Association of Casualty and Surety Companies, 60 John Street, New York 7, New York

Magazine Articles

Billingham, G. H., *Band Saw Guard.* Industrial Arts and Vocational Education, Vol. 37, No. 5, May 1948, pp. 207

Deffendahl, George W., *Safety Check List.* Industrial Arts and Vocational Education, Vol. 29, December 1940, pp. 428

Griffin, R., *An Efficient Shop Pupil Personnel Plan.* Industrial Arts and Vocational Education, Vol. 39, April 1950, pp. 169-71

Hall, Samuel F., *Safety in the School Shops.* Industrial Arts and Vocational Education, Vol. 33, October 1944, pp. 125-26

Merchant, Joseph, *Shop Safety Rules and Aids.* Industrial Arts and Vocational Education, Vol. 36, January 1947, pp. 42-44

Shutts, C. Smithey, *Guarding Woodworking Machinery.* Industrial Arts and Vocational Education, Vol. 37, October 1948, pp. 306-9

Silvius, G. Harold, *Selected Safety Activities Performed by Industrial Arts Teacher.* Industrial Arts and Vocational Education, Vol. 37, October 1948, pp. 301-3

Van Duzzee, Roy, *Safety in School Shops.* Industrial Arts and Vocational Education, Vol. 31, February 1942, pp. 50-52

Charts

School Shop Safety Posters, Ralston Purina Company, Checkerboard Square, St. Louis 2, Missouri

Stanley Safety Charts, Stanley Tools, Educational Department, 1 A, 1149, New Britain, Connecticut

FILM SOURCES AND TITLES

Motion pictures, filmstrips, and slides showing materials, operations, processes, production, and safety methods, may be obtained from many sources. In some cases the use of the film is free, with the school paying only the return transportation charge. Teachers should write to film distributors for listings.

A list of sources of filmstrips, films, and slides, available in Pennsylvania and elsewhere may be found on page 90 of *Industrial Arts in Pennsylvania,* Bulletin 331, Department of Public Instruction, Commonwealth of Pennsylvania, Harrisburg, 1951.

A list of other visual teaching aids in the woodworking area of the comprehensive Industrial Arts general shop follows:

General

Fabricating the Western Pines. Western Pine Association, 510 Yeon Building, Portland 4, Oregon. 16 mm., sound, 35 minutes, free

From Trees to Lumber. International Harvester Company, 180 North Michigan Avenue, Chicago 1, Illinois. 16 mm., sound, 10 minutes, free

Save Those Tools. International Harvester Company, 180 North Michigan Avenue, Chicago 1, Illinois. 16 mm., 10½ minutes, free

Trees for Tomorrow. American Forest Products Industries, 1319 Eighteenth Street, N. W., Washington 6, D. C. 16 or 35 mm., sound, 18 minutes, free

Trees to Tribune. Chicago Tribune, Tribune Tower, Chicago, Illinois. 16 mm., sound, free

Safety Motion Picture Films

Care and Use of Hand Tools—Chisels. National Safety Council, 425 North Michigan Avenue, Chicago 11, Illinois

Care and Use of Hand Tools—Hammers. National Safety Council, 425 North Michigan Avenue, Chicago 11, Illinois

Care and Use of Hand Tools—Pliers and Screwdrivers. National Safety Council, 425 North Michigan Avenue, Chicago 11, Illinois

Care of Minor Wounds. Audio-Visual Aids Library, The Pennsylvania State College, State College, Pennsylvania

Control of Bleeding. Audio-Visual Aids Library, The Pennsylvania State College, State College, Pennsylvania

Factory Safety. Chevrolet Motor Car Company, Detroit, Michigan

Rules for Tools. Audio-Visual Aids Library, The Pennsylvania State College, State College, Pennsylvania

Safety Filmslides

Basic Shop Safety. Jam Handy Organization, 2821 East Grand Boulevard, Detroit 11, Michigan

Disorderly Conduct. American Insurance Company, Film Department, 135 South LaSalle Street, Chicago 3, Illinois

Safe Practices in Woodworking. Jam Handy Organization, 2821 East Grand Boulevard, Detroit 11, Michigan

Safety in the Wood Shop. Carnegie-Illinois Steel Corporation, Industrial Relations Department, Pittsburgh, Pennsylvania

Safety Know-How in the Wood Shop. Charles A. Bennet Company, Inc., 237 North Monroe Street, Peoria, Illinois

Woodworking Machines. National Safety Council, 425 North Michigan Avenue, Chicago 11, Illinois

6. Equipment and Supplies

HOW TO SPECIFY AND ORDER

After approval has been given by the board of education to purchase tools and equipment for an Industrial Arts activity, specifications must be written. It is important that every particular be given for each tool or piece of equipment so that the quality desired may be obtained. A sample of specifications is shown below.

Quantity	*Description*
1	6″ jointer (floor model type), over-all dimensions: length 42½″, width 22¾″, height from floor to jointer 34″, tables 37½″ over-all, each surface 17¼″. Capacity: planes 6″ wide, rabbets ½″ deep. Cutterhead: solid steel, three knife, dynamically balanced, 2½″ diameter. Motor: ½ H.P., 115/230 volt, 60 cycle, 3450 R.P.M., single-phase capacitor start motor. Fence: movable laterally to full table width, plunger indexed at 45° and 90°. Complete with guards, V belts, motor pulley, and motor bracket. Cost:
1	Gauge, marking, hardwood with brass face plates, graduated stem. Cost:
1	Oilstone, India combination, 8″ x 2″ x 1″
5	Planes, block, 6″ long, 1⅝″ cutter

How to Keep a Shop Inventory

Many different methods of keeping shop inventory are used in Industrial Arts shops. The type and form used depend somewhat on the local school organization. In larger systems, methods of keeping inventory are set up by the administrative office. However, in smaller systems, the job of keeping an inventory is the individual shop teacher's responsibility. The advantages of keeping an accurate inventory are so great that a few of the more important advantages are listed here. The inventory form:

1. Tells at all times the amount of stock, and supplies on hand.
2. Gives accurate information as to the amount that was used during the past year.

INVENTORY

Shop _____ Area _____

On Hand				Cost	
Start of Year	End of Year	Description	To Be Ordered	Each	Total
6	2	*Brushes, flat, varnish, 2 in.*	4	1.15	4.60
2	2	*Chisels, wood, socket firmer, 1/2 in.*	0	-----	-----
12 doz.	3 doz.	*Saw blades, coping, 6 1/2 in. long, pin end*	8	.25	2.00
100 bd. ft.	0	*White pine, clear, 1 in. S2S to 3/4 in.*	100 bd. ft.		37.50

3. Determines the amount needed for the next year.
4. Justifies quantities on requisitions to the superintendent and board of education.

A suggested form that has been used successfully by many teachers is shown on page 36.

Tools, Machinery, and Equipment List

The type and amount of equipment selected for any shop activity depend mainly on the size of the class, the grade level of the students, and the type of activity to be taught. Equipment is usually considered to be the machines, tools, and auxiliary aids that are not consumed in the finished product.

The tools, equipment, machinery, and supplies recommended in this bulletin are based on the minimum requirements for woodworking for *five students,* in a comprehensive general shop. A larger number of students can be accommodated by increasing the amounts proportionately. The cost of tools, equipment, and supplies given in this bulletin are as of January 1, 1951, and are therefore subject to fluctuation. Where a particular manufacturer's name is specified, it should not be taken for granted that one manufacturer's products are preferred or recommended over anothers.

MACHINERY AND EQUIPMENT

Quantity	*Item*	*Cost**
4	Woodworking benches, frames to be made of extra heavy birch or maple, with pinned, mortised, and tenon joints, girts full 5″ wide, doweled and bolted in with half-inch bolts and washers, width of top 52″, depth of top 36″, height of bench 32″, equipped with 2 drawers, 2-5 CD, Columbia vises or equal, 2 quick-set bench stops and 2 metal dogs, top to be made of birch or maple, shellac finished	$399.60
1	Lathe, variable speed, 12″ wood. Bed: gap-type, cast-iron, machined-ways top, side, and bottom, 5″ wide. Headstock: cast-iron, machined for precision fit between ways. Steel spindle with No. 2 Morse taper socket. Capacity: swing-over gap 15½″, over-bed 12″, distance between centers 38″. Spindle speeds: 300 to 1300 R. P. M. Over-all dimensions: height 47″, width 12½″, length 60″. Complete with 6″ and 12″ tool rests, head and tailstock centers, ½ H. P. motor, single-phase, 115/230 volt, 60 cycle, 1740 R. P. M., capacitor start, with on-and-off toggle switch and 10′ cord and plug	219.30

* *Subject to price fluctuations.*

Quantity	*Item*	*Cost**
1	Band saw, 16″ floor model, cast-iron frame and base with hinged motor bracket and belt guard. Drive: V belt, 5/8″ wide. Guides: upper and lower guides to have ball-bearing rear thrust rollers with split leaf, double contact steel guides. Guards: wheels covered by hinged doors and blade fully shielded. Table 18″ x 19″, tilting 45° forward and 5° to rear. Over-all dimensions: height 68 3/8″, width 33 3/4″, depth 22″. Motor: 3/4 H. P., 1740 R. P. M., 115/230 volt, 60 cycle, single-phase, complete with switch, cord, and plug	330.75
1	Jointer, 6″ floor model. Tables: 7″ wide and 37 1/2″ long. Guard: dual-purpose guard with thumb hold down and rear knife guard, removable for rabbeting. Cutterhead: 2 1/2″ diameter solid steel ground and dynamically balanced, three knife. Fence: equipped with depth indicator, tilts 45°. Over-all dimensions: height, floor to table, 34 1/2″, length 42 1/2″. Complete with 1/2 H. P., 3450 R. P. M., 115/230 volt, 60 cycle, single-phase motor with on-and-off toggle switch, 10′ cord and plug	175.25
1	Jig saw, 24″, floor model, reciprocating type, bronze bearings, splash lubrication, adjustable saw guide and hold-down, vise to accommodate jig and fret blades up to 1/8″ wide. Over-all dimensions: height 53″, length 38″. Complete with 1/3 H. P., 1740 R. P. M., 115/230 volt, 60 cycle, single-phase motor, four-speed pulley, belt, belt guard, light, and on-and-off switch with cord and plug	125.75
1	Belt and disc surfacer, floor model, 10″ sanding disc, to take belts 52 1/2″ long and 4″ wide. Disc operates at 660, 1280, and 2350 R. P. M. Belt operates at 900, 1760, and 3200 feet per minute. Cast-iron table for disc and belt can be tilted from 90° to 45° shown by graduated scales. Miter gauge slot machined in disc table. Complete with miter gauge 1/2 H. P., 1740 R. P. M., 115/230 volt, 60 cycle, single-phase motor with on-and-off toggle switch, cord, and plug	130.00
1	Drill press,[1] 15″ floor model. Capacity: 39 5/8″ chuck to table, 46″ chuck to base, 7 1/2″ center of chuck to column, spindle—six spline full-floating type, 5/8″ diameter, male No. 33 Jacobs taper for No. 6A Jacobs chuck, four-bar type with ball and feed control. Complete with 10″ x 12 1/4″ machined table and 1/2 H. P., 115/230 volt, 60 cycle, 1740 R. P. M., single-phase motor with on-and-off toggle switch, cord, and plug	132.5

* *Subject to price fluctuations.*

[1] *This equipment is centrally placed in a comprehensive Industrial Arts shop an can be used by all activity areas.*

Quantity	*Item*	*Cost**
1	Saw, tilting arbor, 10″ floor model, complete with guard and splitter, front and side extension tables, miter gauge, fence-locking front and rear, 10″ combination blade, 1 single-phase motor, 1 H. P., 3450 R. P. M., 115/230 volt, 60 cycle, overload switch with cord and plug. Dimensions: height 41″, width 49⅞″, depth 38¾″	271.50
1	*Electric tool grinder[1] with pedestal, plane iron, and chisel-grinding attachment, 2 grinding wheels 7″ x 1″ and wheel guards, ⅝″ arbor. Equipped with eye shields. Complete with 1/3 H. P., 1725 R. P. M., 115/230 volt, 60 cycle motor with on-and-off toggle switch cord, and plug	120.00
1	Portable router, air-cooled motor with large oil-sealed bearings, 1 H. P., 18000 R. P. M., 110 volts, 60 cycle, single-phase. Double-pole enclosed high capacity switch. Chuck: ¾″ x 16 thread, takes adapters for ¼″, 5/16″, ⅜″, and ½″ straight shank bits and ½″ x 12 thread screw shank. Complete with straight and circular gauge, 18″ rubber-covered cable and plug. One ¼″ router bit, one ⅜″ radius core bit, one ¾″ rounding-over bit, and one chamfer bit	56.60
1	Shaper, router, carver, 3-in-1 combination unit. Ideal for working in wood, plastics, and aluminum. Change from one use to another by swinging head in 30 seconds. 18″ x 14″ gray iron machined table. Vertical foot feed, adjustable head, bed, guard, and guides. Complete with motor, 115 volt, 60 cycle, 1200 watt, 20,000 R. P. M. Including collect chuck, 4 router bits, shaper adapters, six guide pins, guide fence, cord, and switch. Over-all size 55″ x 54″, 274 lbs. wt.	284.95
3	Tool panel bases. Size approximately 36″ wide, 39″ high, and 30″ deep. The base should be enameled—preferably green	75.00
3	Tool panel inserts. Size approximately 33″ wide, 37″ high, and 17″ deep. Should be provided with sliding doors. Panel front should be made of plywood so holes may be drilled to place tool hooks	75.00
	Total	$2,396.45

* *Subject to price fluctuations.*

[1] *This equipment is centrally placed in a comprehensive Industrial Arts shop and can be used by all activity areas.*

Tools

Quantity	*Item*	*Cost**
2	Awls, scratch, 3½″ blade	$ .30
1	Bevel, sliding T, 8″	1.00
	Bits	
1 set (13)	auger, ¼″ to 1″, by 16ths	16.67
2	countersink, rosehead, ⅝″	.33
1 ea.	forstner, ¼″, ⅜″, and ½″	4.20
1	expansion, ⅞″ to 3″	2.16
1 set	drill, straight shank, ⅛″ to ½″, by 64ths	8.75
1	screwdriver, square shank, ⅜″	.43
1 ea.	twist drill for wood, to fit brace, 1/16″ to ¼″, by 16ths	.93
1	Bit gauge	.84
6	Blades, hacksaw	2.58
1	Brace, ratchet type, 10″ swing	5.81
	Brushes	
2	glue, round, ½″	1.20
6	flat varnish, ½″	1.32
6	flat varnish, 1″	3.18
6	flat varnish, 2″	6.90
1	Burnisher, oval, 6″	.75
	Calipers	
1	inside, solid nut, 8″	2.62
1	outside, solid nut, 8″	2.62
1	Carving set, No. 41—¼″, No. 2—½″, Nos. 3, 5, 7—½″,	
1	No. 3—¼″, No. 6—⅜″	7.25
	Chisels	
1	cold, ½″	.55
1	wood, socket firmer, 1″	1.84
1	wood, socket firmer, ¾″	1.66
2	wood, socket firmer, ½″	1.58
2	wood, socket firmer, ⅜″	1.58
2	wood, socket firmer, ¼″	1.58
	Clamps	
2	steel bar, 24″	4.82
4	steel bar, 36″	17.76
4	steel bar, 48″	20.00
2	C, 4″	2.46
2	C, 6″	3.68
1	Compass, pencil, 6″	.50
1	Dividers, spring, solid nut, 8″	2.62
1	Doweling jig with 3/16″, ¼″, 5/16″, ⅜″, 7/16″, and ½″ guides	3.75
	Drills	
1	hand, capacity ¼″	4.40
1	Yankee	3.95
1	Filing guide and clamp, Disston D-3 or equal, 12½″ jaws	11.46
	Files	
1	auger bit, 7″	.35
2	flat mill, bastard cut, 10″	.90

* *Subject to price fluctuations.*

Quantity	*Item*	*Cost**
	Files (continued)	
5	half-round cabinet, 10″	5.25
1	saw, slim taper, 5½″	.23
1	saw, slim taper, 7″	.30
1	File card and brush	.99
2	Gauges, marking, 6″	1.78
1	Glass cutter, Red Devil	.29
1	Hacksaw, adjustable frame	.83
	Hammers	
2	nail, 13 oz.	2.88
2	tack, 5 oz.	1.70
1	upholstering, 7 oz.	1.98
	Handscrews	
4	adjustable, 8″	8.52
4	adjustable, 10″	9.60
4	adjustable, 12″	10.96
5	Knives, sloyd, 3⅛″ blade	3.20
1 set	Lathe wood-turning tools, No. 8	15.00
1	Level, 24″	3.50
	Mallets	
2	hickory, 3 x 6	2.32
1	rubber, 24 oz.	1.48
1	Miter box with saw, saw 24″ by 4″, 5½″ capacity at miter, Stanley No. 2244 or equal	38.25
1 ea.	Nail sets, 1/32″, 2/32″, 3/32″	.69
3	Oilers, coppered steel, ⅓ pt., 5″ nozzle	.69
	Oilstones	
1	India combination, 8″ x 2″ x 1″	1.90
1	round-edge slip, 4½″ x 1¾″	.75
	Planes	
1	fore, 18″	7.70
5	block, 6″ long, 1⅝″ cutter	15.25
5	jack, smooth bottom, 14″	27.00
1	rabbet, 6½″ long, 1″ cutter	8.75
	Pliers	
1	combination, 8″	.67
1	side cutting, square jaw, 8″	2.13
1	Putty knife	.67
	Rules	
5	boxwood, 1′, by 8ths and 16ths	4.65
2	zigzag, 6′, Stanley No. 266F or equal	1.13
	Saws	
5	Back, 14 point, 12″	19.00
3	band, ¼″-111¼″, for 16″ saw	3.30
3	band, ¼″-111¼″, for 16″ saw	3.60
1 gro.	blades, coping, 6½″ long, pin end	2.91
1	compass, 12″	1.67
5	coping, for 6½″ pin end blades	3.70
2	hand crosscut, 22″ length, 10 point	4.55

* *Subject to price fluctuations.*

Quantity	*Item*	*Cost**
	Saws (continued)	
1	hand rip, 26″ length, 7 point	4.96
1	keyhole, 10″	1.12
	Saw Sets	
1	for back and panel saws	2.92
1	for circular saws	5.83
1	Saw clamp, for filing circular saws	10.25
2	Scrapers, cabinet, 3″ x 5″	.60
	Screwdrivers	
2	4″ blade, Stanley No. 20 or equal	1.20
4	6″ blade, Stanley No. 20 or equal	1.32
1	8″ blade, Stanley No. 20 or equal	1.76
1	12″ blade, Stanley No. 20 or equal	1.17
	Squares	
1	steel, blade 24 x 2, tongue 16 x 1½	2.37
5	try, 6″	5.60
1 set	Steel figures, ¼″ imprint, hand-cut	1.68
1 set	Steel letters, ¼″ imprint, hand-cut	5.04
1 pr.	Trammel points	2.25
	Total	$423.12

Consumable Supplies

The supplies necessary for any shop activity depend mainly on the size of the class, grade level of the students, type of activity, and the projects included in the teacher's plan of instruction. Supplies consist of materials and hardware such as lumber, nails, screws, and finishing materials consumed in the making of projects and the performing of processes.

The supplies listed here are based on the needs for the woodworking area of a four or more activities shop with a 5 to 10 pupil load in woodworking, six periods per day for 36 weeks. This list may be varied by the local Industrial Arts teacher to meet the requirements of his specific course of study. It should be used more or less as a guide and not as a final form for requisitioning. Types, kinds, and amounts are based on the projects suggested in this bulletin. Supplies commonly used by the entire school system are not listed here. Prices are as of January 1, 1951, and are subject to fluctuations.

Specifications for Wood: Quality must be FAS under National Hardwood Lumber Association rules. Stock must be thoroughly kiln-dried to moisture content suitable for cabinet work. Widths are to be six inches or wider and lengths eight feet and longer for soft woods.

Quantity	*Item*	*Cost**
25 bd. ft.	Red gum, ½″ S2S to ⅜″	$5.65
50 bd. ft.	Red gum, 1″ S2S to ¾″	15.00

* *Subject to price fluctuations.*

Quantity	*Item*	*Cost**
25 bd. ft.	Walnut, ½″ S2S to ⅜″	9.25
50 bd. ft.	Walnut, 1″ S2S to ¾″	23.75
50 bd. ft.	White pine, clear, ⅝″ S2S to ½″	13.75
100 bd. ft.	White pine, clear, 1″ S2S to ¾″	37.50
25 bd. ft.	Yellow poplar, ½″ S2S to ⅜″	4.75
100 bd. ft.	Yellow poplar, 1″ S2S to ¾″	27.00
	Total	$136.65
1 gal.	Alcohol, Denatured	$1.50
10	Belts, sander, 60 gut, 4″ x 52½″	9.78
	Blades	
144	coping saw, pin end, .020″ x .110″ x 6½″	6.30
24	hacksaw, 12″–24T	2.88
	Brads	
1 lb.	wire, ⅝″, No. 20	.55
1 lb.	wire, ¾″, No. 17	.33
1 lb.	wire, 1″, No. 17	.32
1 lb.	wire, 1½″, No. 16	.29
12	Brushes, assorted, ⅛″ to 2″	7.60
2 lb.	Brush cleaner	.52
	Bolts	
1	machine, No. 100M, assortment	1.50
50	stove, 3/16″ x ½″	.25
50	stove, 3/16″ x 1″	.30
50	stove, ¼″ x 1½″	.50
50	stove, 5/16″ x 2″	.85
	Colors	
1 tube	oil, venetian red	.30
1 tube	oil, yellow ochre	.30
1 tube	oil, permanent green, deep	.40
1 tube	oil, cobalt blue	.40
50	Discs, sander, 10″, No. 1	10.20
100	Dowel pins, ⅜ x 3	.67
1 pt.	Drier, Japan	.50
	Enamel	
2 pt.	black	2.34
1 pt.	blue	1.17
2 pt.	chinese red	2.34
2 pt.	jade green	2.34
4 pt.	undercoater	3.44
4 pt.	white	4.68
1 pt.	yellow	1.17
	Fasteners	
200	corrugated, ½ x 5	.42
36	table top	.36

* *Subject to price fluctuations.*

Quantity	*Item*	*Cost**
1 sq. ft.	Felt, rubbing, grey	1.84
	Filler	
½ pt.	paste wood, golden oak	.41
½ pt.	paste wood, walnut	.41
½ pt.	paste wood, mahogany	.41
5 lb.	Flue, hot cabinet	2.50
2 qt.	Glue, franklin	3.16
1 doz.	Handle wedges, No. 0	.08
	Holders	
3 doz.	tool, No. 1	2.46
1 doz.	tool, No. 2	1.13
2 doz.	Hooks, cup, 1″	.62
1 doz.	Knobs, drawer, 1¼″	.80
	Nails	
2 lb.	common 2d	.24
2 lb.	common 4d	.24
4 lb.	common 6d	.48
10 lb.	common 8d	1.20
5 lb.	common 10d	.60
2 lb.	finish 2d	.26
2 lb.	finish 4d	.26
5 lb.	finish 6d	.65
5 lb.	finish 8d	.65
2	Oilers, coppered steel, ½ pt., 3″ nozzle	.52
	Oil	
1 qt.	linseed	.90
1 gal.	lubricating, SAE 20	1.00
1 qt.	rubbing	.30
1	3 in 1, 8 oz.	.50
2 pkgs.	Pads, steel wool, No. 00	1.08
2	Pipe, continuous thread, ⅜″	.70
	Plastic wood	
1	¼ lb., mahogany	.31
1	¼ lb., walnut	.31
1	¼ lb., oak	.31
2	Putty, oil, 1 lb.	.24
1 gal.	Remover, paint and varnish	1.85
	Sandpaper	
100	No. 1½	2.00
100	No. 1	1.74
100	No. 0	1.47
50	No. 00	.75
	Screws	
1 gro.	steel wood, FHB, ¼″ No. 2	.36
1 gro.	steel wood, FHB, ⅜″, No. 4	.39
1 gro.	steel wood, FHB, ½″, No. 6	.42

* *Subject to price fluctuations.*

Quantity	*Item*	*Cost**
	Screws (continued)	
2 gro.	steel wood, FHB, ¾″ No. 7	.50
3 gro.	steel wood, FHB, 1″, No. 8	.61
1 gro.	steel wood, FHB, 1¼″, No. 10	.79
1 gro.	steel wood, FHB, 1½″, No. 10	.86
1 gro.	round-head blued, ¼″, No. 2	.41
1 gro.	round-head blued, ⅜″, No. 4	.44
2 gro.	round-head blued, ½″, No. 6	1.00
3 gro.	round-head blued, ¾″, No. 7	1.71
3 gro.	round-head blued, 1″ No. 8	2.04
2 gro.	round-head blued, 1¼″, No. 10	1.80
1 gro.	round-head blued, 1½″, No. 10	.99
2 gal.	Shellac, white, 4 lb. cut	7.60
1	Solvent, plastic wood, 8 oz.	.85
	Stain	
1 qt.	oil, walnut	.97
1 qt.	oil, mahogany	.97
1 qt.	oil, dark oak	.97
1 qt.	oil, light oak	.97
	Sticks, shellac	
2	golden oak	.60
2	medium mahogany	.60
2	medium walnut	.60
	Tacks	
100	thumb, 5/16″	.25
1 lb.	upholsterers, ⅜″	.37
2 gal.	Turpentine	3.00
	Varnish	
1 gal.	rubbing	4.31
1 gal.	spar	6.05
10 lb.	Wipers, colored	3.70
1 lb.	Wax, polishing	.60
	Total	$141.61

* *Subject to price fluctuations.*

Storage and Control of Tools

The storage and arrangement of tools depend largely on the physical layout of the shop, type of activities, size of class, money available, and the facility with which the tools can be checked at the end of the shop period. Some of the different methods used are:

1. Tool room
2. Open tool panels (placed according to activities)
3. Tool cupboards
4. Bench racks
5. Bench drawers

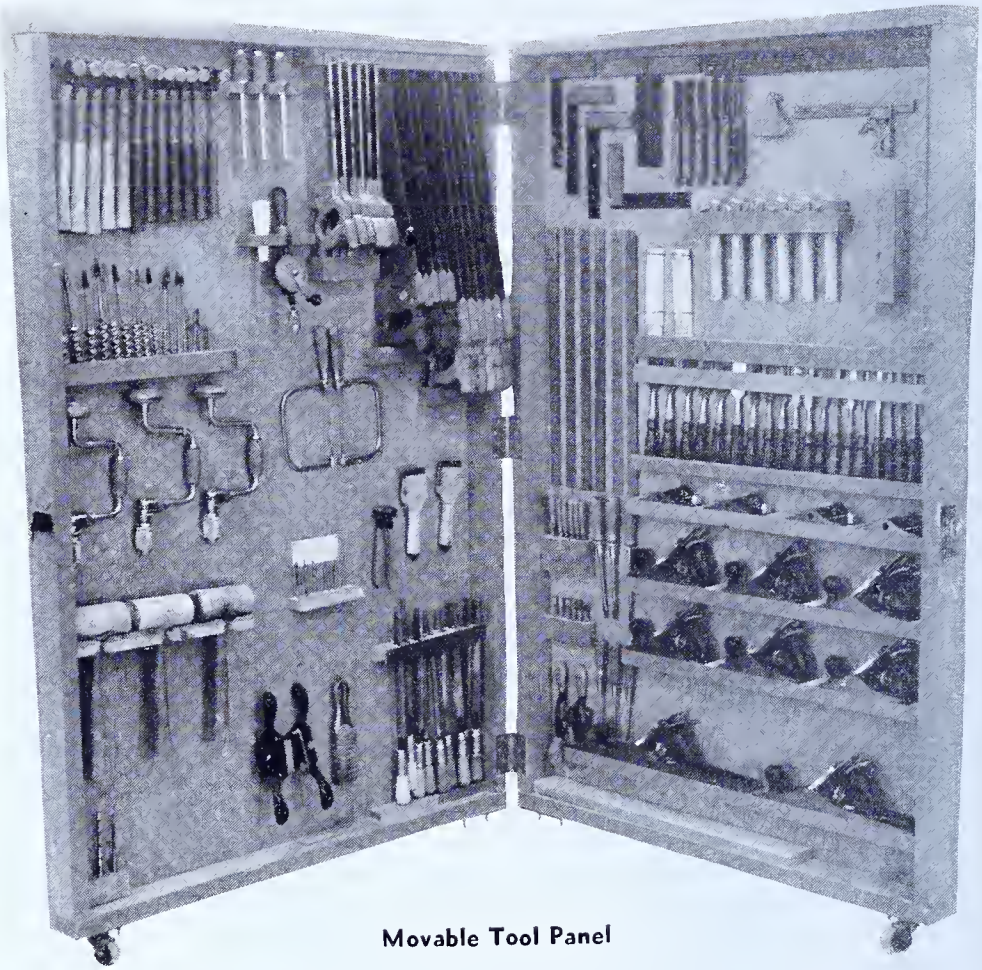

Movable Tool Panel

6. Individual tool kits or boxes (used mostly in auto mechanics or machine shop)

The use of the open tool panel is recommended instead of other methods of tool storage because it not only saves time in obtaining and returning tools, but also improves the appearance of the shop itself. The tool panels are fastened to the wall containing the tools that are normally used in a particular work area. Each panel is painted with a light background with the silhouette of each tool painted in a dark color. In situations where it is not advisable to use the tool panel method, the tool room method should be considered.

Storage of Supplies and Projects

The storage space for consumable supplies is a very important factor when planning building facilities for the Industrial Arts program. A dry and well-ventilated room should be provided for the storage of lumber. The room should be large enough to accom-

modate commercial stock sizes if possible, and be so arranged that incoming supplies can be unloaded directly from the delivery truck into the storage room.

A separate room for the storage of unfinished projects should be located adjacent to the main shop room. This room should be equipped with bins or shelves, approximately 3′ x 3′ x 3′ in size. Provision should be made for separate bins or shelves for each class section.

Careful planning for the storage of supplies and projects pays dividends in helping to keep the shop in a neat and orderly condition.

The Finishing Room

The final step in the completion of a woodworking project is the application of an appropriate finish. Conditions under which finishing material is applied determines to a great extent the value of the completed project. To obtain the proper standard of finish, a room planned specifically for that purpose must be provided. This room should open off the shop proper and the partition between the shop and the finishing room should be constructed so that approximately 50 per cent of the wall will be glass. This type of construction enables the instructor to supervise the pupils at all times. This room should be as near dustproof as possible. Provisions should be made for the storage of paints, shellac, varnishes, and other finishing materials by constructing shelves on one wall of the room.

SUGGESTIONS FOR

7. Shop Layouts

Industrial Arts shop facilities are a part of the secondary school building, but care is required in preparing a standard Industrial Arts shop layout. Shown in Plans A and B on pages 50, 51 and 53 are two layouts of Comprehensive General Shops. The woodworking areas are distinguished from other activity areas; however, the shop as a whole is presented for the guidance of teacher and administrator.

Plan A (pages 50 and 51) represents a two-shop Industrial Arts program. Both shops might use the same planning and storage facilities. Either shop could be used alone for evening adult classes. The general plan, equipment, and layout of the shop in Plan A are ideal and highly desirable. While the total area is 3060 sq. ft., 1200 sq. ft. are required for lobby, planning room, hallway, lavatories, and storage which could be shared by the adjacent shop. The work area is approximately 1800 square feet.

PLAN A—FOR TWO-SHOP INDUSTRIAL ARTS PROGRAM

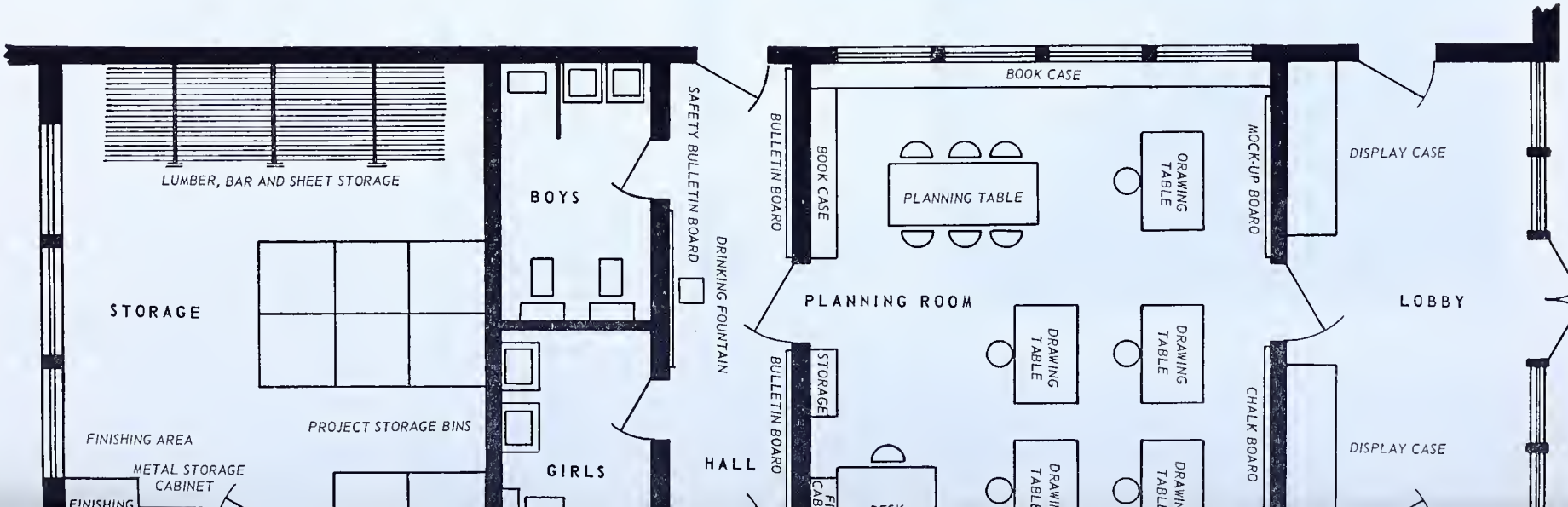

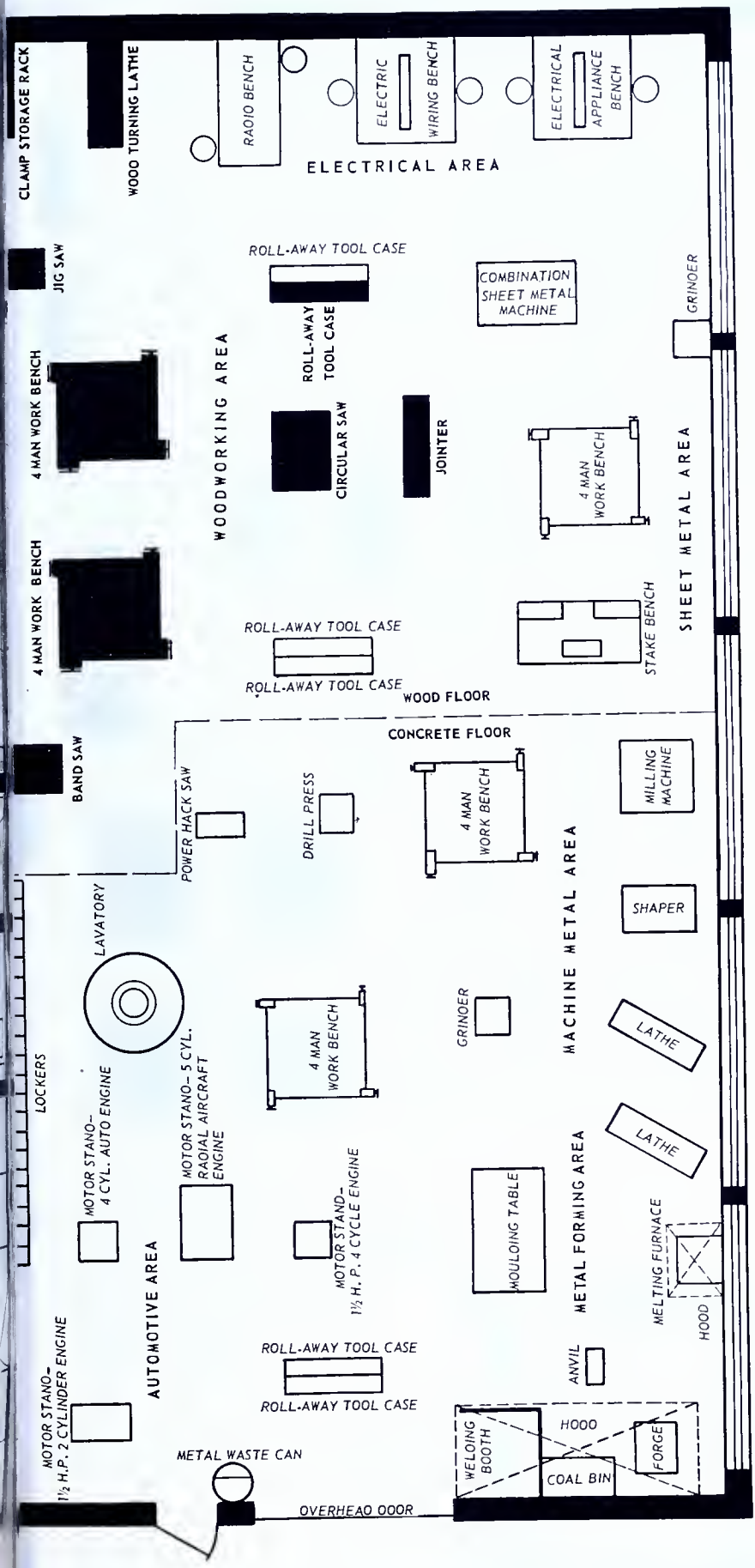
CLAMP STORAGE RACK
WOOD TURNING LATHE
RADIO BENCH
ELECTRIC
WIRING BENCH
ELECTRICAL
APPLIANCE BENCH
ELECTRICAL AREA
JIG SAW
ROLL-AWAY TOOL CASE
COMBINATION SHEET METAL MACHINE
GRINDER
4 MAN WORK BENCH
ROLL-AWAY TOOL CASE
WOODWORKING AREA
CIRCULAR SAW
JOINTER
4 MAN WORK BENCH
SHEET METAL AREA
4 MAN WORK BENCH
STAKE BENCH
ROLL-AWAY TOOL CASE
ROLL-AWAY TOOL CASE
WOOD FLOOR
CONCRETE FLOOR
BAND SAW
POWER HACK SAW
DRILL PRESS
4 MAN WORK BENCH
MILLING MACHINE
MACHINE METAL AREA
SHAPER
LAVATORY
LOCKERS
4 MAN WORK BENCH
GRINDER
LATHE
MOTOR STAND- 4 CYL. AUTO ENGINE
MOTOR STAND- 5 CYL. RADIAL AIRCRAFT ENGINE
LATHE
MOTOR STAND- 1½ H.P. 4 CYCLE ENGINE
MOULDING TABLE
METAL FORMING AREA
MELTING FURNACE
HOOD
AUTOMOTIVE AREA
ROLL-AWAY TOOL CASE
ROLL-AWAY TOOL CASE
ANVIL
MOTOR STAND- 1½ H.P. 2 CYLINDER ENGINE
WELDING BOOTH
HOOD
FORGE
COAL BIN
METAL WASTE CAN
OVERHEAD DOOR

PLAN B

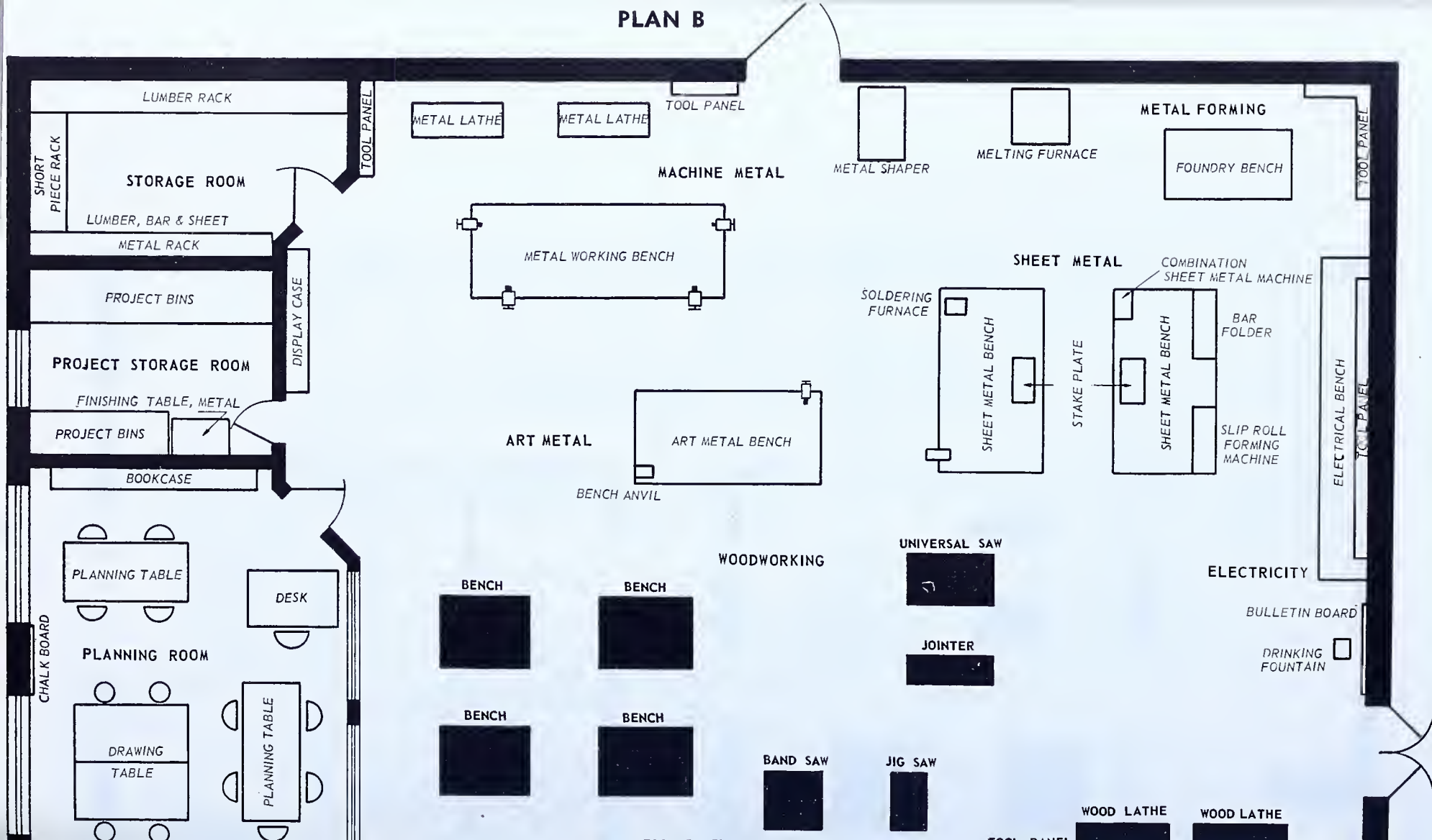
LUMBER RACK
SHORT PIECE RACK
STORAGE ROOM
LUMBER, BAR & SHEET
METAL RACK
TOOL PANEL
PROJECT BINS
DISPLAY CASE
PROJECT STORAGE ROOM
FINISHING TABLE, METAL
PROJECT BINS
BOOKCASE
PLANNING TABLE
DESK
CHALK BOARD
PLANNING ROOM
DRAWING TABLE
PLANNING TABLE
METAL LATHE
METAL LATHE
TOOL PANEL
MACHINE METAL
METAL WORKING BENCH
ART METAL
ART METAL BENCH
BENCH ANVIL
WOODWORKING
BENCH
BENCH
BENCH
BENCH
BAND SAW
JIG SAW
UNIVERSAL SAW
JOINTER
METAL SHAPER
MELTING FURNACE
METAL FORMING
FOUNDRY BENCH
TOOL PANEL
SHEET METAL
SOLDERING FURNACE
SHEET METAL BENCH
STAKE PLATE
SHEET METAL BENCH
COMBINATION SHEET METAL MACHINE
BAR FOLDER
SLIP ROLL FORMING MACHINE
ELECTRICAL BENCH
TOOL PANEL
ELECTRICITY
BULLETIN BOARD
DRINKING FOUNTAIN
WOOD LATHE
WOOD LATHE

The work area provides for the following in addition to Planning:

Activity	*Floor Space*	*Work Stations*
Automotive area	330 sq. ft.	4-5
Metal forming area	195 sq. ft.	3-4
Machine metal area	305 sq. ft.	4-5
Woodworking (black area)	445 sq. ft.	7-9
Sheet metal area	230 sq. ft.	4-5
Electrical area	200 sq. ft.	4-6

Thirty pupil work stations are provided. These allow ample space for the reassignment of pupils as they complete work on projects and are moved from one activity to another. The capacity of the shop should be limited to 25 pupils at any one time.

Plan B (page 52) is a typical Comprehensive General Shop representing an area of about 2160 square feet and providing for 22 work stations for the following, in addition to Planning:

Activity	*Floor Space*	*Work Stations*
Machine metal area	385 sq. ft.	4-6
Art metal area	150 sq. ft.	2-3
Metal forming area	180 sq. ft.	2-3
Sheet metal area	250 sq. ft.	3-4
Electrical area	105 sq. ft.	2-3
Woodworking (black area)	500 sq. ft.	8-10

This shop is planned to stand alone and yet include ample space and equipment for a good Industrial Arts program.

The teacher with initiative will not be limited to the equipment and the Industrial Arts activities suggested in these plans. He is encouraged to add work of Industrial Arts significance above and beyond the specific areas herein provided.

3083